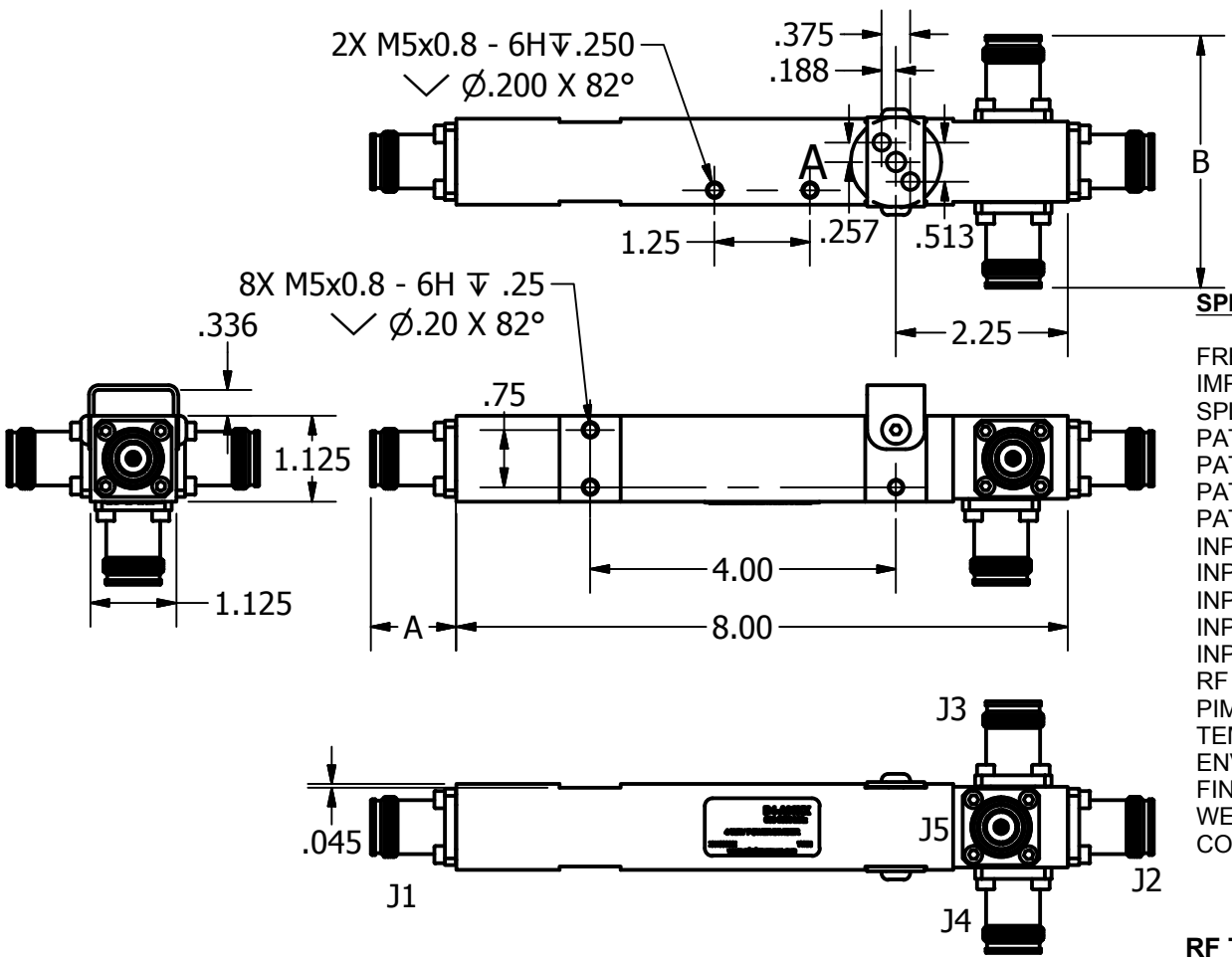

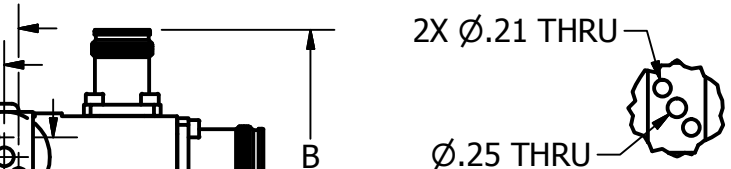

DETAIL A
SCALE 2 : 5

SPECIFICATION **D4-A93XX**

FREQUENCY RANGE:	350-6000 MHz
IMPEDANCE:	50 OHM
SPLIT:	6.0 dB NOM.
PATH LOSS (350-600 MHz):	7.0 TYP.
PATH LOSS (600-630 MHz):	6.3 dB MAX.
PATH LOSS (630-3950 MHz):	6.6 dB MAX.
PATH LOSS (3950-6000 MHz):	7.0 dB MAX.
INPUT RET. LOSS (350-600 MHz):	7.0 dB TYP.
INPUT RET. LOSS (600-630 MHz):	15.0 dB MIN.
INPUT RET. LOSS (630-3950 MHz):	17.0 dB MIN.
INPUT RET. LOSS (3950-5000 MHz):	16.0 dB MIN.
INPUT RET. LOSS (5000-6000 MHz):	15.0 dB MIN.
RF POWER:	500 W AVG.
PIM 2x20W:	160 dBc
TEMPERATURE:	-20°C to +55°C
ENVIRONMENT:	IP67
FINISH:	CLEAR CHEM FILM
WEIGHT:	1.8 LB
CONNECTORS:	4.3-10(f) SHOWN *
	*SEE CONNECTOR TABLE FOR PART NUMBER

RF TESTING: FACTORY 100% TESTED & CERTIFIED FOR SPLIT, INS. LOSS, & INPUT RETURN LOSS.

PIM TESTING: FACTORY 100% TESTED & CERTIFIED IN PCS BAND

CONNECTOR TYPE	N	DIN 7/16	DIN 4.3/10
PART NUMBER	D4-A93N	D4-A93D	D4-A93D43
A	0.96	1.27	1.13
B	2.97	3.59	3.31

HOUSING:
MATERIAL: ALUMINIUM 6061-T6
FINISH: RoHS CLEAR CHEM FILM
PER MIL-DTL-5541 TYPE 2 CLASS 3,
CONNECTORS : BRASS TRIPLATE FINISH

DRAWN F Landeros 7/9/2026
DWG NO D4-A93-OLrev4
UNLESS OTHERWISE SPECIFIED:
ALL UNITS ARE IN inches [mm]
TOLERANCE:
X.XX ±0.01
X.XXX ±0.005

Made in USA
Designed, Assembled, Tested

RDmicrowaves

TITLE
4 WAY POWER SPLITTER 350-6000 MHz

SIZE A | MODEL NO D4-A93XX | REV 4
SCALE 2 : 5 | PROPERTY OF R&D MICROWAVES LLC | SHEET 1 OF 1