

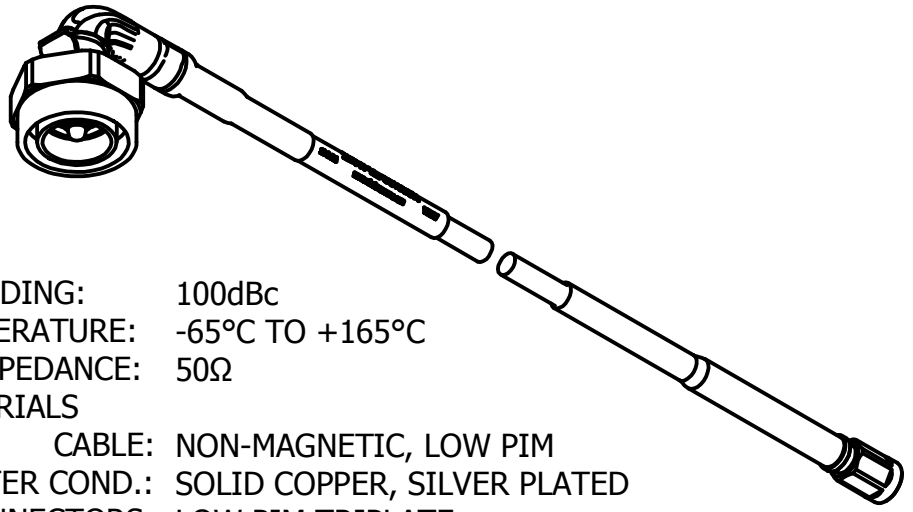

SPECIFICATION:

CONNECTORS:	7/16 DIN(m) to NEX10(m)
FREQUENCY:	DC - 6GHz
RETURN LOSS:	23 dB MIN, .4-4 GHz
	17 dB MIN, 4-6 GHz
INSERTION LOSS:	25dB/100m @ 1 GHz
PIM:	160dBc
MIN BEND RADIUS:	30mm SINGLE, 120mm MULTIPLE
RF POWER:	1kW @ 1GHz MINIMUM
CABLE TYPE:	RG401, .250" BRAIDED WITH FEP JACKET (.270 dia)

SHIELDING:	100dBc
TEMPERATURE:	-65°C TO +165°C
RF IMPEDANCE:	50Ω
MATERIALS	
CABLE:	NON-MAGNETIC, LOW PIM
CENTER COND.:	SOLID COPPER, SILVER PLATED
CONNECTORS:	LOW PIM TRIPLATE

RoHS COMPLIANT

DRAWN: F Landeros	8/28/2026	RDmicrowaves	
DWG NO: 250W-30F-DMRBNXM-OLrev1		TITLE: 7/16 DIN(m) RIGHT ANGLE BOOT TO NEX10(m) RG401 (.250" DIA) BRAIDED CABLE	
UNLESS OTHERWISE SPECIFIED: ALL UNITS ARE IN inches [mm] TOLERANCE: X.XX ±0.01 X.XXX ±0.005			
Made in USA Designed, Assembled, Tested		SIZE: A	MODEL NO: 250W-30F-DMRBNXM / REV: 1
		SCALE: 1 : 2	PROPERTY OF R&D MICROWAVES LLC / SHEET 1 OF 1