DESCRIPTION

THE MODEL P8T-500M40G-50-R-55-292FF IS A HIGH SPEED, SINGLE POLE, EIGHT THROW, REFLECTIVE SWITCH CAPABLE OF SWITCHING WITHIN 50ns. THE FREQUENCY RANGE IS 0.5 TO 40.0 GHz AND THIS SWITCH HAS OVER 45dB OF ISOLATION.

SPECIFICATIONS

- FREQUENCY RANGE: . . . . . 0.5 TO 40.0 GHz
- ISOLATION: . . . . . 45dB MIN
- INSERTION LOSS: . . . . . 9dB TYP
- VSWR IN/OUT: . . . . . 3.0:1 TYP.
- OPERATING INPUT POWER: . . . +20dBm CW
- SWITCHING SPEED: . . . . . 50 ns TYP.
- DC VOLTAGE AND CURRENT: . . . +5VDC @ 100mA
  -5VDC @ 50mA
- CONTROL SIGNAL: . . . . . EIGHT LINE TTL
  E1 CONTROLS J1-J2
  E2 CONTROLS J1-J3
  E3 CONTROLS J1-J4
  E4 CONTROLS J1-J5
  E5 CONTROLS J1-J6
  E6 CONTROLS J1-J7
  E7 CONTROLS J1-J8
  E8 CONTROLS J1-J9
  "0" ISOLATION
  "1" INSERTION LOSS
- CONNECTORS: . . . . . 2.92mm (F) REMOVABLE
- FINISH: . . . . . BLUE EPOXY POLIMIDE COATING IAW MIL-C-22750, TYPE I OVER EPOXY POLIMIDE PRIMER IAW MIL-P-23377, TYPE I, CLASS 1 OR 3.
- SIZE: . . . . . 4.0" X 1.5" X 0.4"

ENVIRONMENTAL RATINGS

- **TEMPERATURE:** . . . . -40°C TO +85°C (OPERATING)
  -55°C TO +125°C (STORAGE)

NOTE: SPECIFICATIONS WILL VARY OVER OPERATING TEMPERATURE
NOTE: THE ABOVE SPECIFICATIONS ARE SUBJECT TO CHANGE OR REVISION

ALL DIMENSIONS ARE IN INCHES
TOLERANCES:
X.XX ±0.020
X.XXX ±0.010

PMI CONFIDENTIAL AND PROPRIETARY

REVISIONS

ZONE	REV.	DESCRIPTION	DATE	APPROVED
	1	ORIGINAL RELEASE	01/12/16	
	A1	ECN # 16-0115	09/01/16	

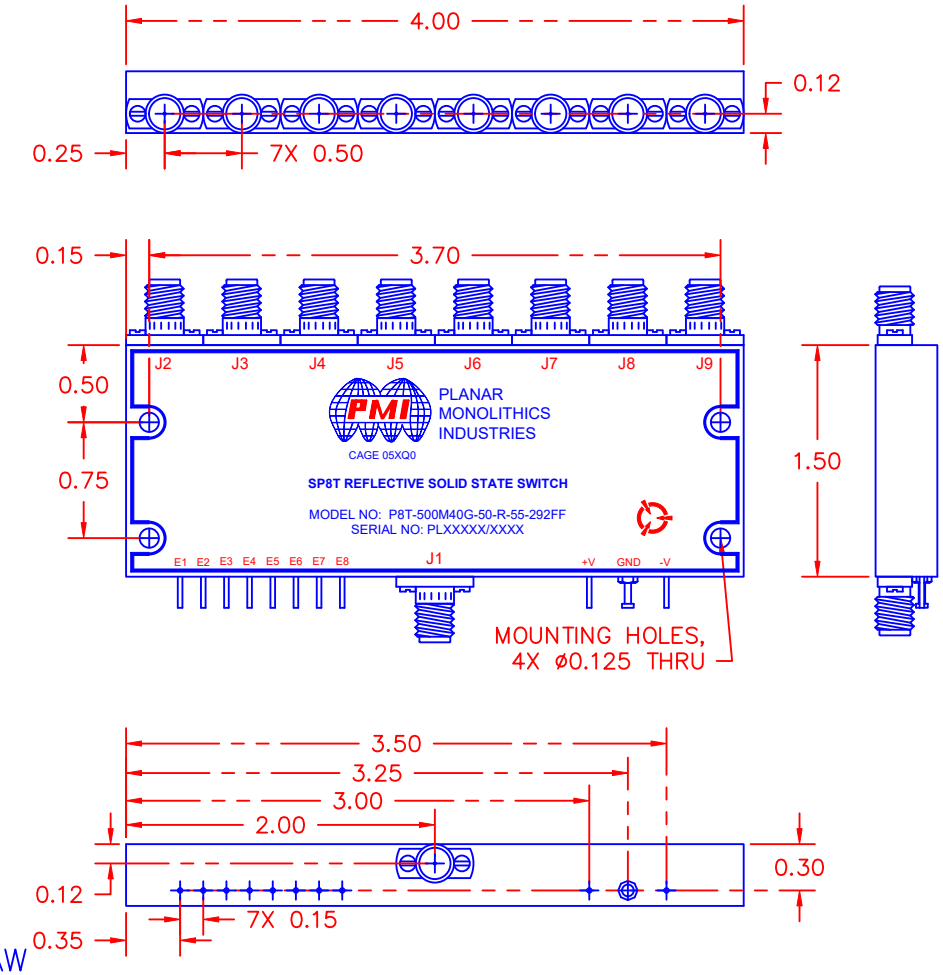

PLANAR MONOLITHICS INDUSTRIES, INC.
7311-F GROVE ROAD
FREDERICK, MARYLAND 21704 USA
TEL: (301)-662-5019, FAX: (301)-662-1731
WEB: www.pmi-rf.com, EMAIL: sales@pmi-rf.com
ISO 9001 CERTIFIED

APPROVALS	DATE
DRAWN B.Thomas	01/12/16
CHECKED	
ISSUED	

TITLE: PRODUCT FEATURE P8T-500M40G-50-R-55-292FF

SIZE	FSCM NO.	DWG NO.	REV.
A	05XQ0	27027701	A1

SCALE N:S SHEET 1 OF 1