ZONE	REV.	DESCRIPTION	DATE	APPROVED
	A1	ORIGINAL RELEASE	3/21/2024	

DESCRIPTION:

PLANAR MONOLITHICS INDUSTRIES MODEL NUMBER P2T-218-60-512-R-SFF IS A SINGLE POLE, TWO THROW, REFLECTIVE SWITCH OPERATING OVER THE FREQUENCY RANGE OF 2.0 TO 18.0 GHz. IT HAS A MINIMUM ISOLATION OF 60 dB AND A MAXIMUM INSERTION LOSS OF 1.8 dB. THIS MODEL IS OUTFITTED WITH SMA FEMALE CONNECTORS.

SPECIFICATIONS:

FREQUENCY RANGE: 2.0 TO 18.0 GHz
INTERFACE: TTL (SEE TRUTH TABLE)
ISOLATION: 60 dB MIN
INSERTION LOSS: 1.8 dB MAX
SWITCHING SPEED: 30 ns MAX
VSWR: 1.9:1 MAX
IMPEDANCE: 50 Ω
RF INPUT POWER: 1W CW / 2W PEAK MAX
SUPPLY VOLTAGES: +5V @ 65 mA MAX, -12V @ 65 mA MAX
CONNECTORS: SMA FEMALE (FIELD REPLACABLE)
FINISH: GOLD PLATED

TRUTH TABLE	
L1	OUTPUT
"1"	J1-J2
"0"	J1-J3

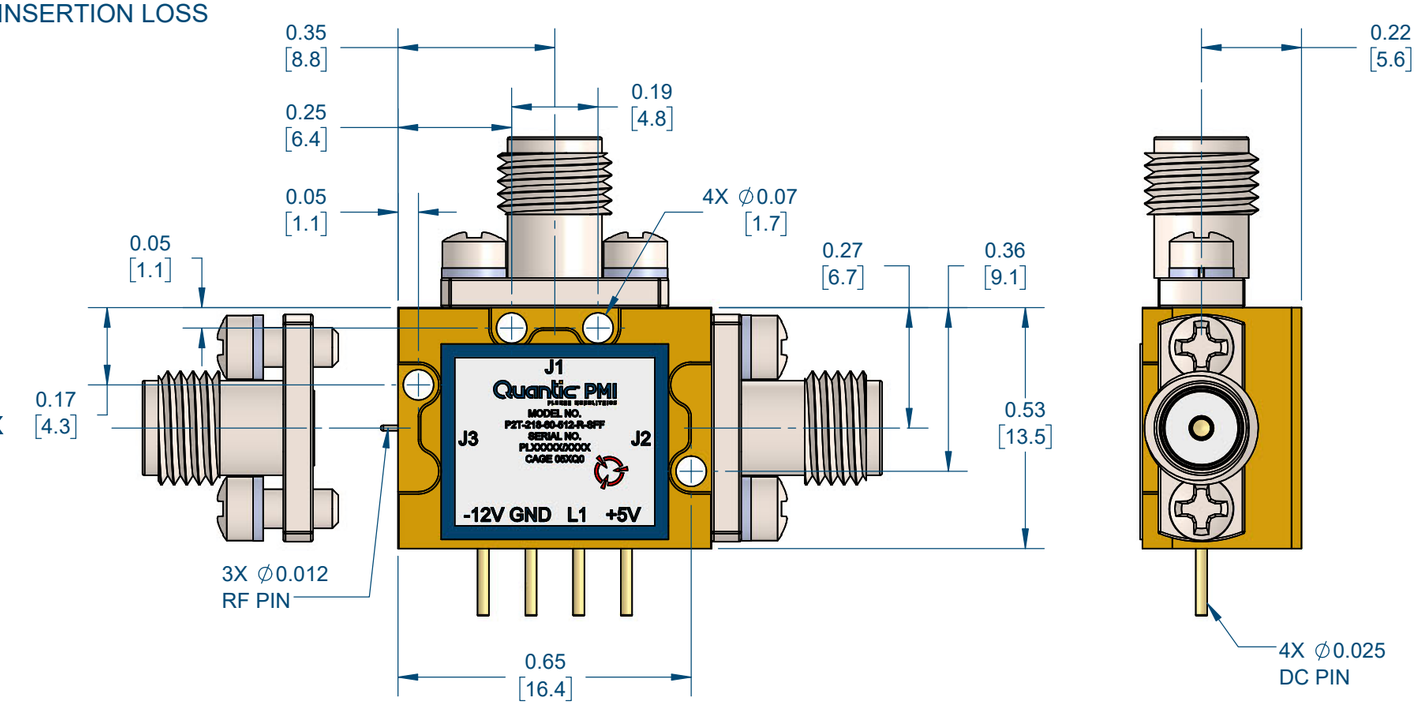

ENVIRONMENTAL RATINGS:

TEMPERATURE: -54°C TO +95°C (OPERATING)
-57°C TO +125°C (STORAGE)
VIBRATION: RANDOM: 20-500 Hz
SPECTRAL DENSITY: 0.01g²/Hz
RMS: 6.8g
MECHANICAL SHOCK: PEAK: 100g
DURATION: 4 ms, HALFSINE
HUMIDITY: 90%
PRESSURE: OPERATION: 0.6-1.4 BAR
STORAGE: 0.3-1.4 BAR
VARIATION: ±0.5 BAR
CORROSION: RESISTANT AGAINST SEAWATER
MTBF: 200,000 h
EMC: NO RADIATION

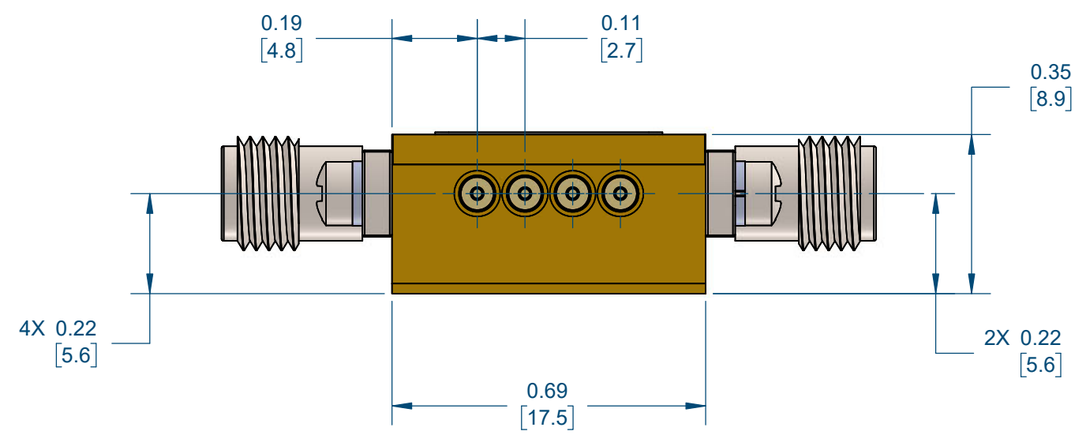

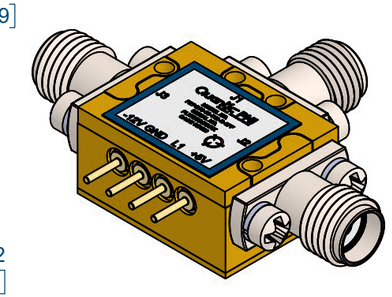

NOTE: THE ABOVE SPECIFICATIONS ARE SUBJECT TO CHANGE OR REVISION
SPECIFICATIONS WILL VARY OVER OPERATING TEMPERATURE

PMI CONFIDENTIAL AND PROPRIETARY

UNLESS OTHERWISE SPECIFIED DIMENSIONS ARE IN INCHES
TOLERANCES ARE:
FRACTIONS ± | DECIMALS .XX ± 0.010 .XXX ± 0.005 | ANGLES ±

MATERIAL:
FINISH:

NEXT ASSY	USED ON
APPLICATION	

PART NO.	
APPROVALS	DATE
DRAWN D. HOSCHAR	3/21/2024
REDRAWN	
ISSUED	

Quantic PMI
PLANAR MONOLITHICS
7309-A GROVE ROAD FREDERICK MARYLAND 21704 USA
TEL: (301) 662-5019, FAX: (301) 662-1731
WEB: WWW.QUANTICPMI.COM, EMAIL: SALES@QUANTICPMI.COM
ISO 9001 CERTIFIED

TITLE OUTLINE
P2T-218-60-512-R-SFF

SIZE	FSCM NO.	DWG NO.	REV.
B	05XQ0	27048420	A1

SCALE 3:1 SHEET 1 OF 1