ZONE	REV.	DESCRIPTION	DATE	APPROVED
	A1	ORIGINAL RELEASE	5/4/2026	

DESCRIPTION:

PMI MODEL PLDRO-1D5G-100M-EXT-SMA IS A PLDRO WITH AN OUTPUT FREQUENCY OF 1.5 GHz AND 100 MHz EXTERNAL REFERENCE. FITTED WITH SMA CONNECTORS.

SPECIFICATIONS:

- OUTPUT FREQUENCY:..... 1.5 GHz
- REFRENCE FRREQUENCY:..... 100 MHz (SINE WAVE)
- INPUT LEVEL:.....+3 dBm TO +13 dBm
- OUTPUT LEVEL:..... +13 dBm MIN.
- SPURIOUS:..... -70 dBc MAX.
- HARMONICS:..... -20 dBc MAX.
- LOAD VSWR:..... 1:1.5 MAX.
- PHASE NOISE:..... -43 dBc/Hz MAX. @ 100 Hz
  -126 dBc/Hz MAX. @ 1 kHz
  -131 dBc/Hz MAX. @ 10 kHz
  -131 dBc/Hz MAX. @ 100 kHz
  -140 dBc/Hz MAX. @ 1 MHz
- FREQUENCY STABILITY:.....SAME AS REFERENCE
- SUPPLY VOLTAGE:..... +15V
- CURRENT:..... 300 mA MAX.
- LOCK DETECTOR:.....TTL HIGH IN LOCK
- CONNECTOR:..... RF CONNECTOR: SMA FEMALE
  POWER CONNECTOR: CAPACITIVE FEEDTHRU
- REFERENCE PHASE NOISE:.....-135 dBc/Hz MAX. @ 100 Hz
  -155 dBc/Hz MAX. @ 1 kHz
  -160 dBc/Hz MAX. @ 10 kHz

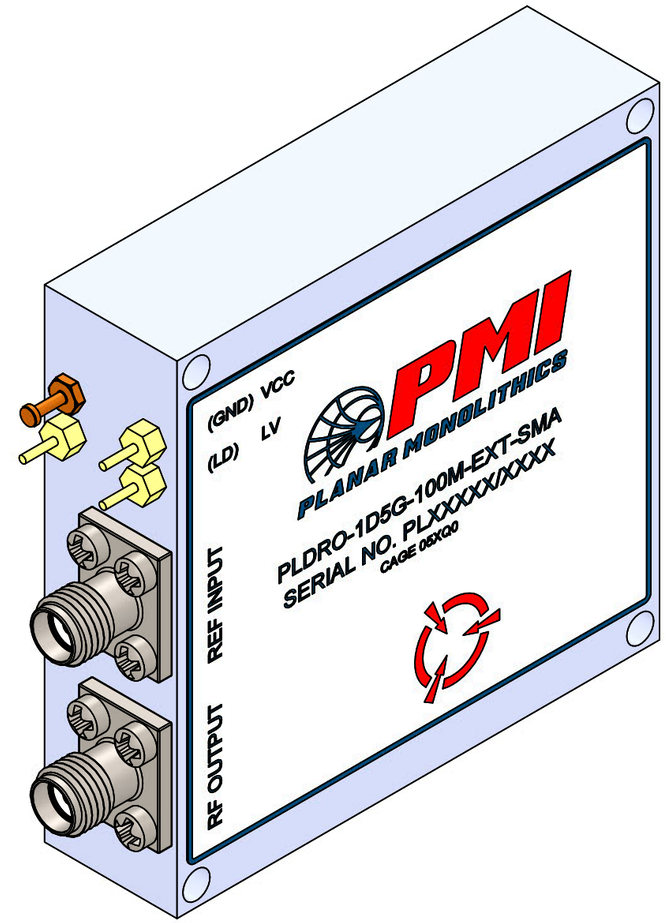

ENVIRONMENTAL RATINGS:

- TEMPERATURE:..... -40°C TO +70°C (OPERATING)
  -50°C TO +80°C (STORAGE)
- HUMIDITY:.....MIL-STD-202, METHOD 103 COND. B
- SHOCK:.....MIL-STD-202, METHOD 213 COND. B
- VIBRATION:.....MIL-STD-202, METHOD 204 COND. B
- ALTITUDE:.....MIL-STD-202, METHOD 105 COND. B
- TEMPERATURE CYCLE:.....MIL-STD-202, METHOD 107 COND. A

NOTE: SPECIFICATIONS WILL VARY OVER TEMPERATURE
NOTE: THE ABOVE SPECIFICATIONS ARE SUBJECT TO CHANGE OR REVISION

PMI CONFIDENTIAL AND PROPRIETARY

UNLESS OTHERWISE SPECIFIED
DIMENSIONS ARE IN INCHES
TOLERANCES ARE:
FRACTIONS ± | DECIMALS .XX ± 0.02 .XXX ± 0.01 | ANGLES ±

APPROVALS	DATE
DRAWN VP	5/4/2026
REDRAWN	
ISSUED	

PMI PLANAR MONOLITHICS
7309-A GROVE ROAD FREDERICK MARYLAND 21704 USA
TEL: (301) 662-5019, FAX: (301) 662-1731
WEB: WWW.QUANTICPMI.COM, EMAIL: SALES@QUANTICPMI.COM
ISO 9001 CERTIFIED

TITLE: OUTLINE
PLDRO-1D5G-100M-EXT-SMA

SIZE	FSCM NO.	DWG NO.	REV.
B	05XQ0	27054660	A1

SCALE 2:1 SHEET 1 OF 2

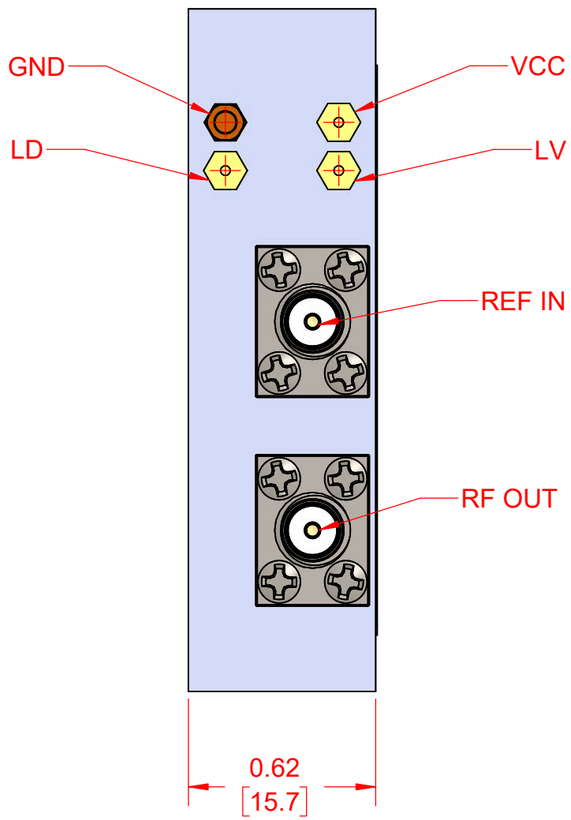

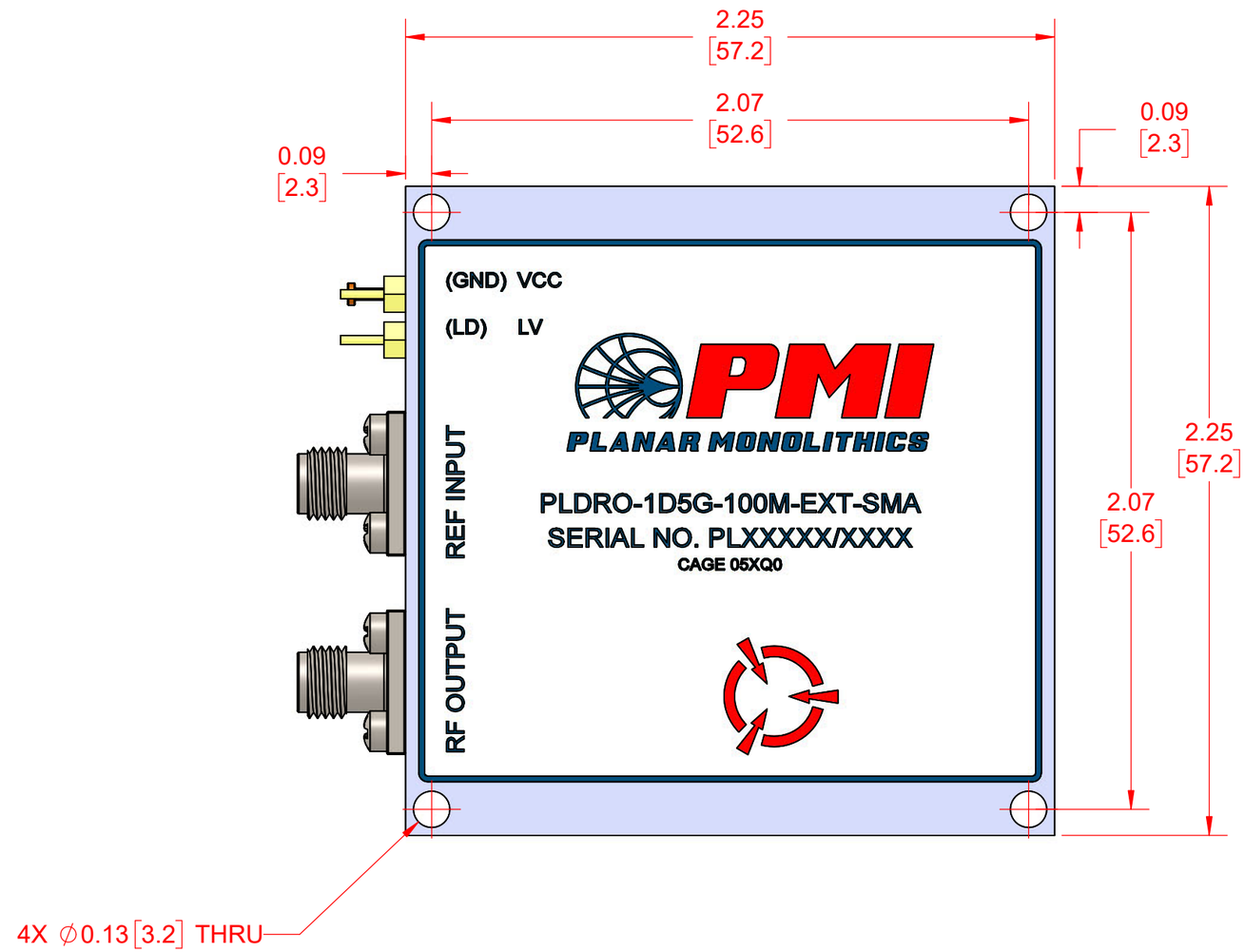

PMI CONFIDENTIAL AND PROPRIETARY

PLANAR MONOLITHICS
7309-A GROVE ROAD FREDERICK MARYLAND 21704 USA
TEL: (301) 662-5019, FAX: (301) 662-1731
WEB: WWW.QUANTICPMI.COM, EMAIL: SALES@QUANTICPMI.COM
ISO 9001 CERTIFIED

TITLE			
OUTLINE PLDRO-1D5G-100M-EXT-SMA			
SIZE	FSCM NO.	DWG NO.	REV.
B	05XQ0	27054660	A1
SCALE 2:1		SHEET 2 OF 2	