ZONE	REV.	DESCRIPTION	DATE	APPROVED
	A1	ORIGINAL RELEASE	5/21/2026	

DESCRIPTION:

PMI MODEL NUMBER QSM-220-15-SFF IS A 2 TO 20 GHz AMPLIFIER. THIS AMPLIFIER IS SUPPLIED IN OUR STANDARD PEAFS3 HOUSING THAT CAN BE USED AS A SMA CONNECTORIZED OR A SURFACE MOUNT COMPONENT.

SPECIFICATIONS:

- FREQUENCY RANGE:..... 2 TO 20 GHz
- GAIN:..... 15 dB TYP, 12dB MIN
- GAIN FLATNESS:.....±1.5 dB MAX
- NOISE FIGURE:..... 3 dB TYP, 5dB MAX
- OP1dB:..... 14 dBm TYP, 11 dBm MIN
- Psat:..... 16 dBm TYP, 14 dBm MIN
- HARMONICS:.....-20 dBc MAX @-10dBm INPUT POWER
  -12 dBc MAX @0dBm INPUT POWER
  -10 dBc MAX @+10dBm INPUT POWER
- OIP3:.....+19 dBm MIN
- MAX RF INPUT POWER:.....+18 dBm CW MAX
- VSWR (INPUT/OUTPUT):..... 2:1 MAX
- DC SUPPLY:.....+12 to +15 VDC
  100 mA MAX (Idq)
  125 mA MAX (Psat)
- CONNECTORS:..... SMA FEMALE
- FINISH:..... GOLD PLATED

ENVIRONMENTAL RATINGS:

- TEMPERATURE:.....-55°C TO +85°C (OPERATING)
  -65°C TO +125°C (STORAGE)
- HUMIDITY:..... MIL-STD-202, METHOD 103 COND. B
- SHOCK:..... MIL-STD-202, METHOD 213 COND. B
- VIBRATION:..... MIL-STD-202, METHOD 204 COND. B
- ALTITUDE:..... MIL-STD-202, METHOD 105 COND. B
- TEMPERATURE CYCLE:..... MIL-STD-202, METHOD 107 COND. A

NOTE: SPECIFICATIONS WILL VARY OVER TEMPERATURE
NOTE: THE ABOVE SPECIFICATIONS ARE SUBJECT TO CHANGE OR REVISION

HOUSING WITH CARRIER

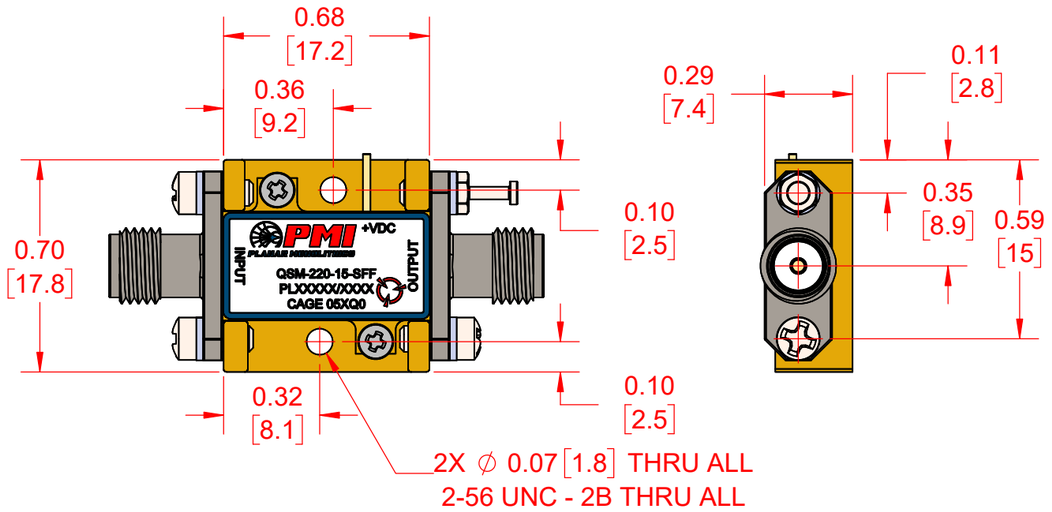

HOUSING WITHOUT CARRIER (SURFACE MOUNT)

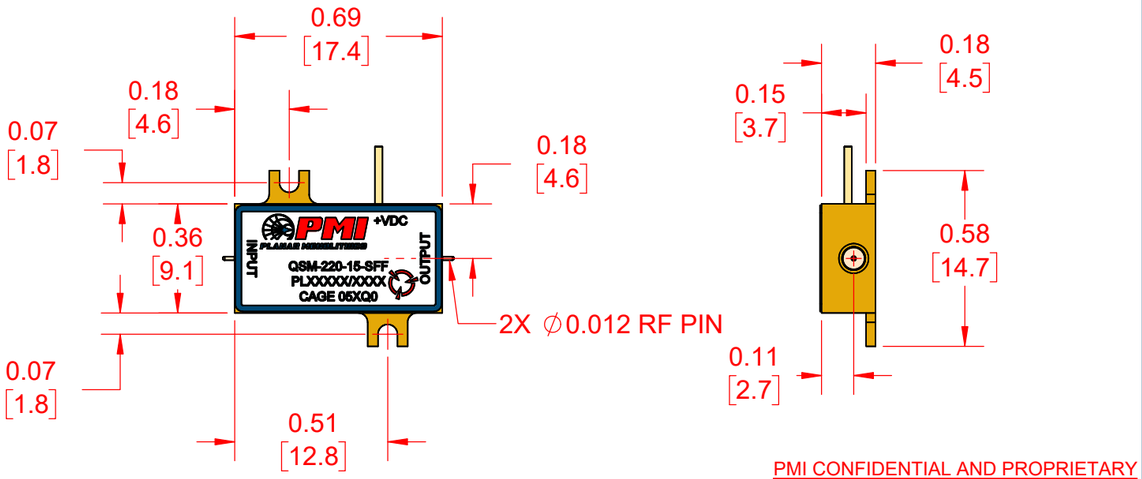

PMI CONFIDENTIAL AND PROPRIETARY

APPROVALS	DATE
DRAWN D. HOSCHAR	5/21/2026
REDRAWN	
ISSUED	

UNLESS OTHERWISE SPECIFIED DIMENSIONS ARE IN INCHES
TOLERANCES ARE:
FRACTIONS ± DECIMALS .XX ± 0.02 .XXX ± 0.01 ANGLES ±

PLANAR MONOLITHICS
7309-A GROVE ROAD FREDERICK MARYLAND 21704 USA
TEL: (301) 662-5019, FAX: (301) 662-1731
WEB: WWW.QUANTICPMI.COM, EMAIL: SALES@QUANTICPMI.COM
ISO 9001 CERTIFIED

TITLE: OUTLINE
QSM-220-15-SFF

SIZE	FSCM NO.	DWG NO.	REV.
B	05XQ0	27055040	A1

SCALE 2:1 SHEET 1 OF 1