CRISTEK INTERCONNECTS, INC

MICRO-D METAL SHELL, STRAIGHT BOARD MOUNT, CONDENSED, W/ O-RING/GASKET

NO. OF CONTACTS	A ±.005	B BSC	C O-RING	C SQUARE GASKET	D	E
9	.957	.565	.480	.480	.773	.298
15	1.107	.715	.480	.480	.923	.298
21	1.257	.865	.480	.480	1.073	.298
25	1.357	.965	.480	.480	1.173	.298
31	1.507	1.115	.480	.480	1.323	.298
37	1.657	1.265	.480	.480	1.473	.298
51	1.657	1.215	.523	.561	1.477	.440
69	1.957	1.515	.523	.561	1.777	.440
100	2.383	1.800	.600	.638	2.219	.515

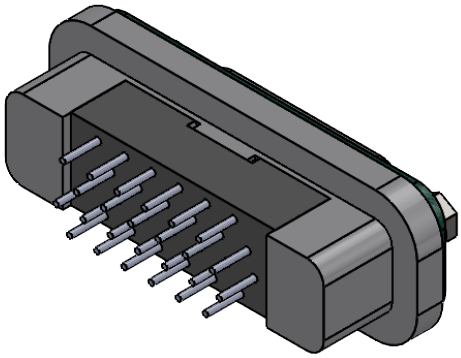

REAR VIEW

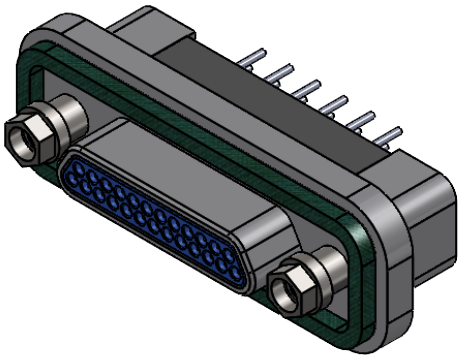

WITH GASKET

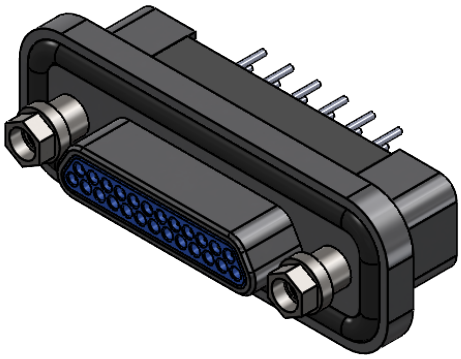

WITH O-RING

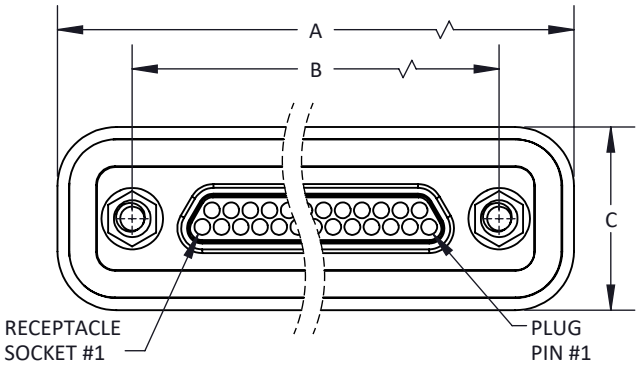

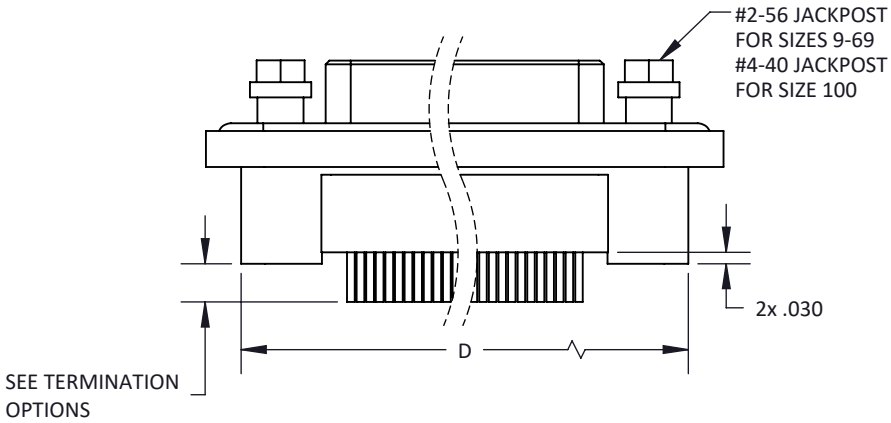

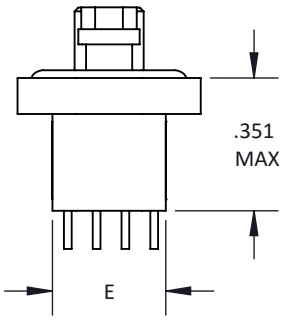

TOLERANCE: .XXX ±.005 .XX ±.01 ANGLE ±1°	TITLE MICRO-D METAL SHELL STRAIGHT BOARD MOUNT, CONDENSED, W/ O-RING/GASKET	SHT 1 OF 4	DWG. NO. MDV	REV H

CRISTEK INTERCONNECTS, INC

MICRO-D METAL SHELL, STRAIGHT BOARD MOUNT, CONDENSED, W/ O-RING/GASKET

MDV — X XXX — X X X — X

METAL MICRO-D STRAIGHT BOARD MOUNT CONDENSED W/ O-RING/GASKET

GENDER
- 1 = RECEPTACLE, SOCKET CONTACTS
- 2 = PLUG, PIN CONTACTS

NUMBER OF CONTACTS
- 009 025 051
- 015 031 069
- 021 037 100

SHELL HARDWARE
- 0 = NO HARDWARE
- 3 = JACKPOST (.040 PANEL MOUNT)
- 4 = JACKPOST (.060 PANEL MOUNT)
- 5 = JACKPOST (.070 PANEL MOUNT)
- 6 = JACKPOST (.080 PANEL MOUNT)

SHELL FINISH
- A = CADMIUM
- B = ELECTROLESS NICKEL

O-RING
- C = O-RING CONDUCTIVE
- D = O-RING DIELECTRIC
- S = SQ GASKET CONDUCTIVE
- OMIT IF NO O-RING

TERMINATION
- 1 = .109 ±.015
- 2 = .140 ±.015
- 3 = .172 ±.015
- 4 = .190 ±.015
- 5 = .250 ±.015
- 6 = .125 ±.015

ALL 24 AWG HOT SOLDER DIPPED

MATERIALS AND FINISHES ARE IAW MIL-DTL-83513
FOR DETAILS SEE MIL SPEC OR WWW.CRISTEK.COM

1. MATERIALS:
   SHELL - ALUMINUM ALLOY
   INSULATOR/BACKSHELL - GLASS FILLED THERMOPLASTIC
   PIN/SOCKET CONTACT - COPPER ALLOY
   INTERFACIAL SEAL - FLUOROSILICONE BLEND

2. FINISH:
   SHELL - ELECTROLESS NICKEL OR CADMIUM OVER ELECTROLESS NICKEL
   PIN/SOCKET CONTACT - GOLD OVER NICKEL

3. SPECIFICATIONS:
   CURRENT RATING ---------- 3 AMPS MAX
   TEMPERATURE RATING ---------- -55° C TO +125° C
   INSULATION RESISTANCE -------- 5000 MEGOHMS MIN
   DWV AT SEA LEVEL ---------- 600 VAC
   DWV AT 70,000 FT ALTITUDE --- 150 VAC
   CONTACT RESISTANCE ---------- 24 AWG = 25 MILLIOHMS MAX
   CONTACT RETENTION ---------- 5 lb MINIMUM AXIAL LOAD
   ENGAGEMENT FORCE ---------- 6 oz MAX
   SEPARATION FORCE ---------- 0.5 oz MIN

4. ADDITIONAL INFORMATION:
   DESIGN AND PERFORMANCE IN GENERAL ACCORDANCE WITH M83513 WHERE APPLICABLE.
   CONTACT CRISTEK FOR OTHER CONFIGURATIONS.

TOLERANCE: .XXX ±.005 .XX ±.01 ANGLE ±1°	TITLE MICRO-D METAL SHELL STRAIGHT BOARD MOUNT, CONDENSED, W/ O-RING/GASKET	SHT 2 OF 4	DWG. NO. MDV	REV H

CRISTEK INTERCONNECTS, INC

MICRO-D METAL SHELL, STRAIGHT BOARD MOUNT, CONDENSED, W/ O-RING/GASKET

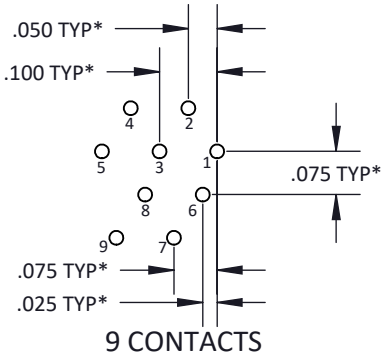

9 CONTACTS

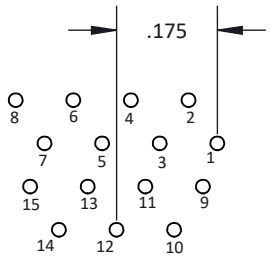

15 CONTACTS

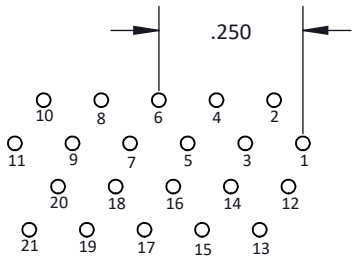

21 CONTACTS

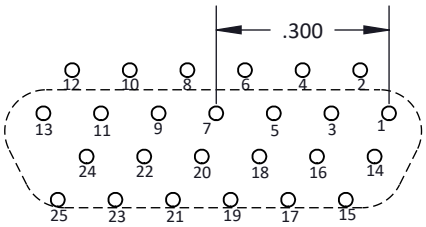

25 CONTACTS

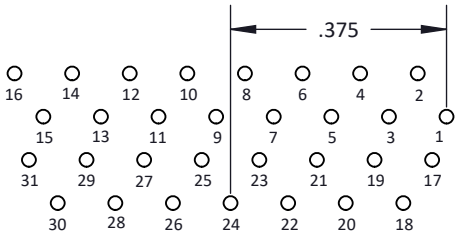

31 CONTACTS

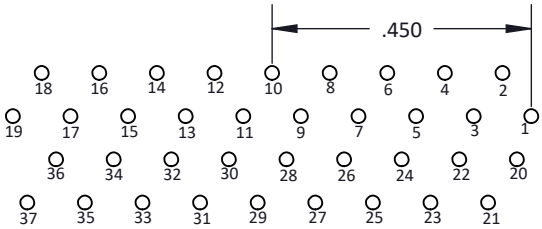

37 CONTACTS

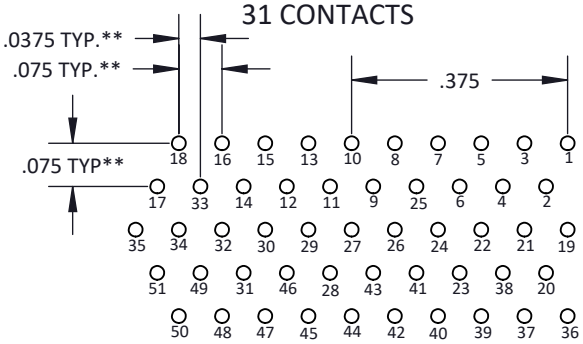

51 CONTACTS

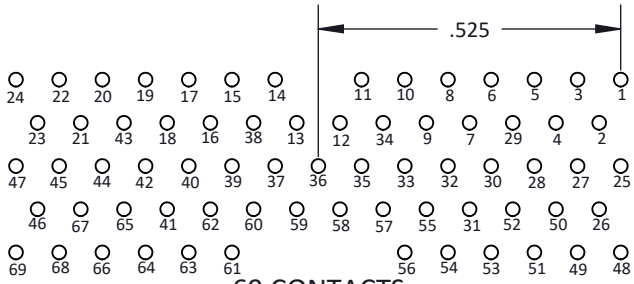

69 CONTACTS

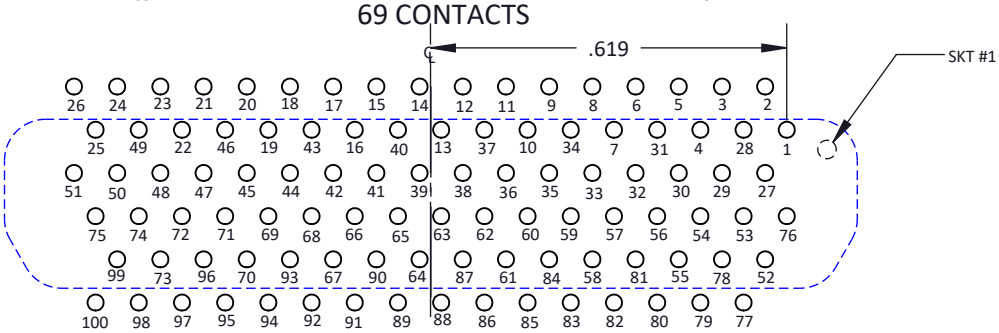

100 CONTACTS

MDV RECEPTACLE PCB LAYOUTS

* SIZES 9-37:.100 X .075 GRID PATTERN OFFSET BY .050

** SIZES 51-100:.075 X .075 GRID PATTERN OFFSET BY .0375

TOLERANCE: .XXX ±.005 .XX ±.01 ANGLE ±1°	TITLE MICRO-D METAL SHELL STRAIGHT BOARD MOUNT, CONDENSED, W/ O-RING/GASKET	SHT 3 OF 4	DWG. NO. MDV	REV H

CRISTEK INTERCONNECTS, INC

MICRO-D METAL SHELL, STRAIGHT BOARD MOUNT, CONDENSED, W/ O-RING/GASKET

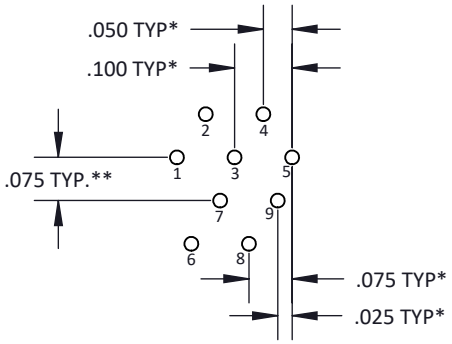

9 CONTACTS

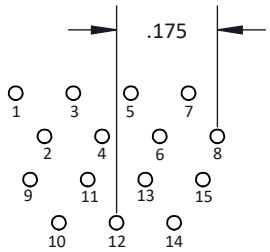

15 CONTACTS

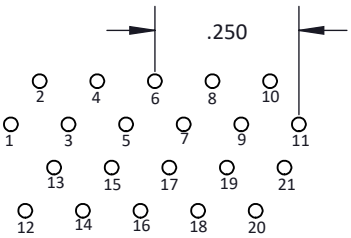

21 CONTACTS

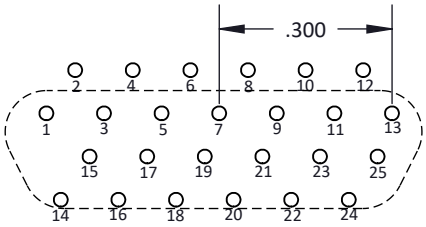

25 CONTACTS

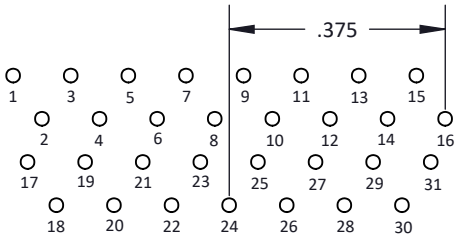

31 CONTACTS

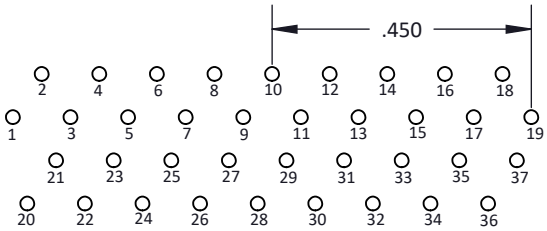

37 CONTACTS

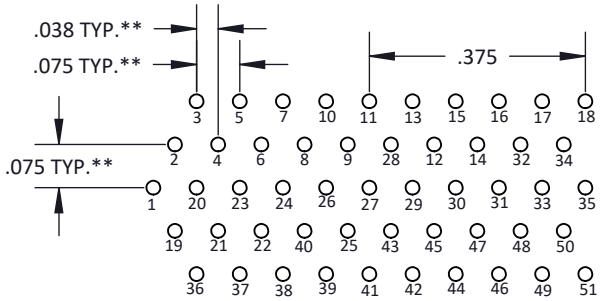

51 CONTACTS

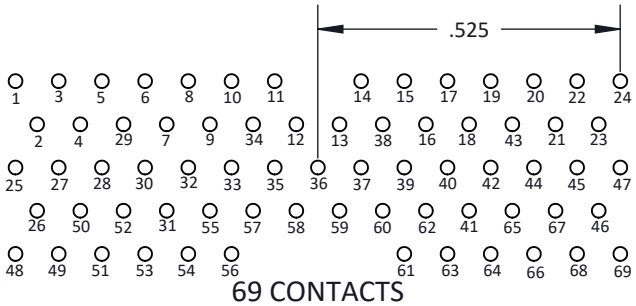

69 CONTACTS

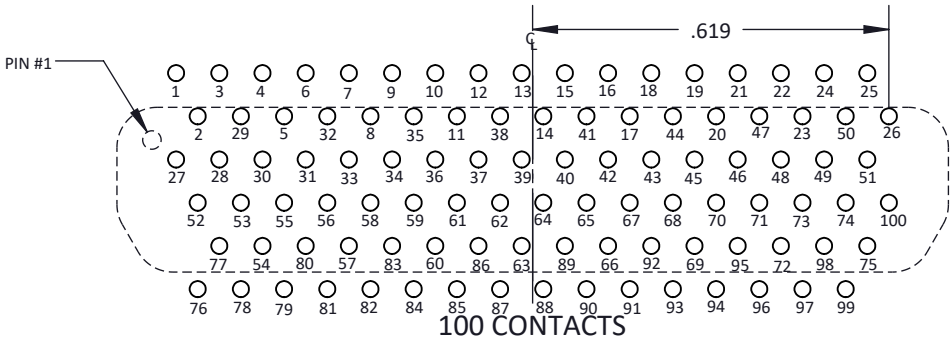

100 CONTACTS

MDV PLUG PCB LAYOUTS

* SIZES 9-37:.100 X .075 GRID PATTERN OFFSET BY .050

** SIZES 51-100:.075 X .075 GRID PATTERN OFFSET BY .0375

TOLERANCE: .XXX ±.005 .XX ±.01 ANGLE ±1°	TITLE MICRO-D METAL SHELL STRAIGHT BOARD MOUNT, CONDENSED, W/ O-RING/GASKET	SHT 4 OF 4	DWG. NO. MDV	REV H