| ZONE | REV. | DESCRIPTION | DATE | APPROVED |
|---|---|---|---|---|
| | 1 | ORIGINAL RELEASE | 9/9/2019 | |
| | | | | |
| | | | | |

## DESCRIPTION:

PLANAR MONOLITHICS INDUSTRIES MODEL NUMBER PIM-618-4CH-60-SFF IS A 6-18 GHz FEED-THRU ASSEMBLY. THIS MODEL HAS 4 INDEPENDENT RF PATHS (CHANNEL A, B, C, D). EACH PATH CONTAINS AN EXTERNAL FEED-THRU PATH WITH SWITCHED RF BYPASS. A SINGLE CONTROL LINE DETERMINES THE EXTERNAL FEED-THRU BYPASS STATE (ENABLED OR BYPASSED) ON ALL 4 CHANNELS.

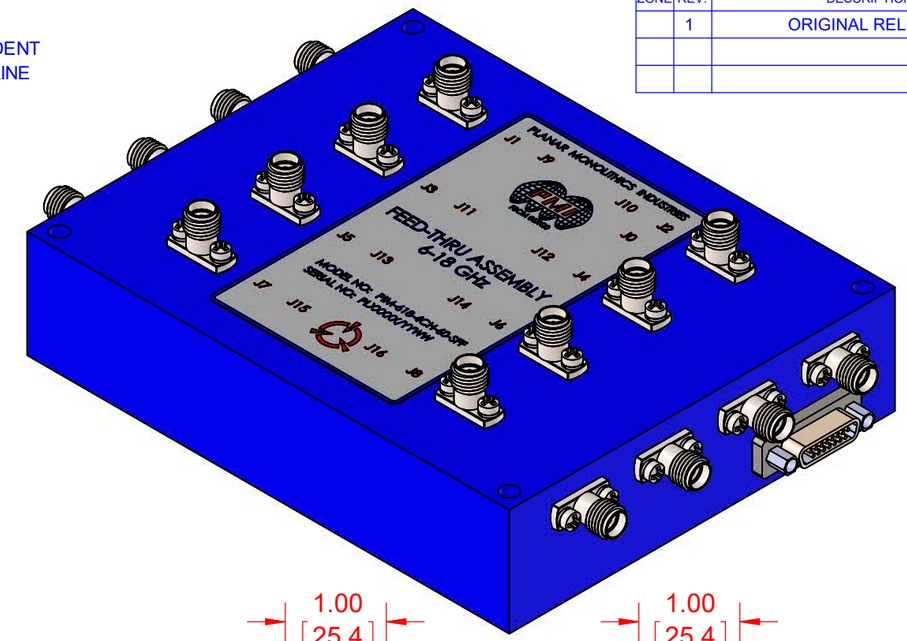


## SPECIFICATIONS:

- FREQUENCY:..... 6-18 GHz
- INSERTION LOSS:
  - EXTERNAL FEED-THRU ENABLED..... 0.75 dB MIN / 1.5 dB MAX (6 - 12 GHz) IN TO OUT ' AND IN ' TO OUT
    1.0 dB MIN / 2.0 dB MAX (12 - 18 GHz) IN TO OUT ' AND IN ' TO OUT
  - EXTERNAL FEED-THRU BYPASSED... 1.0 dB MIN / 3.0 dB MAX (6 - 12 GHz) IN TO OUT
    1.5 dB MIN / 4.0 dB MAX (12 - 18 GHz) IN TO OUT
- INSERTION LOSS FLATNESS:
  - EXTERNAL FEED-THRU ENABLED..... 1.0 dB PEAK TO PEAK MAX (6 - 12 GHz) IN TO OUT ' AND IN ' TO OUT
    1.5 dB PEAK TO PEAK MAX (12 - 18 GHz) IN TO OUT ' AND IN ' TO OUT
  - EXTERNAL FEED-THRU BYPASSED... 1.5 dB PEAK TO PEAK MAX (6 - 12 GHz) IN TO OUT
    2.0 dB PEAK TO PEAK MAX (12 - 18 GHz) IN TO OUT
- CHANNEL TO CHANNEL ISOLATION:..... 60 dB MIN
- PHASE MATCHING:..... 5 DEGREES MAX (6 - 16 GHz), 7 DEGREES MAX (16 - 18 GHz), CH A&D, CH A&B, CH A&C
- INPUT / OUTPUT VSWR:..... 2 : 1 MAX
- MAX INPUT POWER (SURVIVAL):..... +24 dBm
- INPUT P1dB:..... +18 dBm MIN
- INPUT IP3:..... +28 dBm MIN

- EXTERNAL BYPASS CONTROL:..... LOGIC 0: 0.8V MAX, -0.4 mA MAX
  OPEN CIRCUIT = LOGIC 1 — LOGIC 1: 2.0V MIN, 20 uA MAX
  "0" = EXTERNAL FEED-THRU ENABLED
  "1" = EXTERNAL FEED-THRU BYPASSED
- SWITCHING SPEED:..... 100 ns WITHIN 0.5 dB AND 5 DEGREES OF FINAL STATE
- SWITCHING TRANSIENTS:..... -60 dBm MAX > 2 GHz INTO 20 MHz BW
- SPURIOUS OUTPUTS:..... -80 dBm MAX
- RF LEAKAGE:..... -60 dBm MAX (+10 dBm IN, OUT TERM IN 50 OHMS)
- DC POWER:..... +12 VDC (+11.4 V TO +14.0 V) @ 400 mA MAX
  -12 VDC (-11.4 V TO -14.0 V) @ 200 mA MAX
- RF CONNECTORS:..... SMA FEMALE
- POWER / CONTROL CONNECTOR:..... 15 SOCKET MICRO-D CONNECTOR
- SIZE:..... 4.5" X 3.6" X 1.0"
- WEIGHT:..... 16 OZ MAX
- FINISH:..... PAINTED BLUE

| J0 PIN | SIGNAL |
|---|---|
| 1 | GROUND |
| 2 | A1 (SPARE) |
| 3 | A3 (SPARE) |
| 4 | N/C |
| 5 | +12 VDC |
| 6 | +12 VDC RTN |
| 7 | -12 VDC |
| 8 | -12 VDC RTN |
| 9 | A0 |
| 10 | A2 (SPARE) |
| 11 | N/C |
| 12 | +12 VDC |
| 13 | +12 VDC RTN |
| 14 | -12 VDC |
| 15 | -12 VDC RTN |

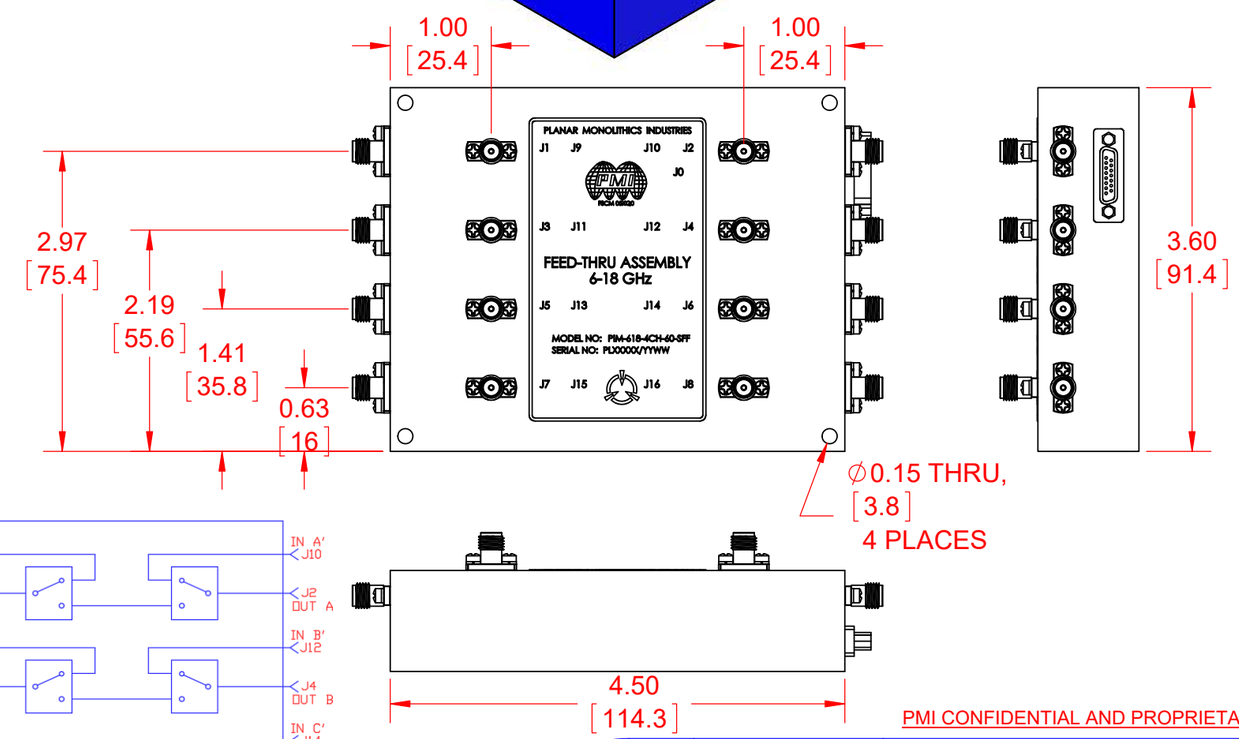


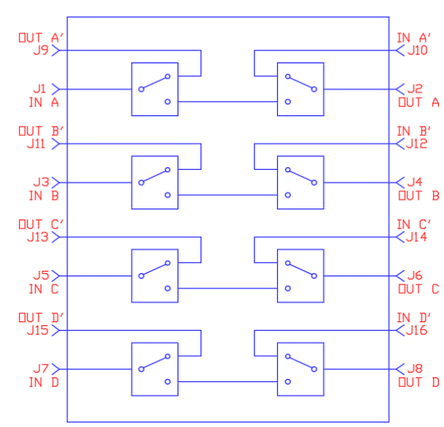


## ENVIRONMENTAL RATINGS:

- ALTITUDE (NON-OPERATING):..... MIL-STD 810, METHOD 500.4, PROCEDURE I, SEA LEVEL TO 36,000 FT
- ALTITUDE (OPERATING):..... MIL-STD 810, METHOD 500.4, PROCEDURE I, SEA LEVEL TO 11,000 FT
- TEMPERATURE (OPERATING):..... -30°C TO +75°C
- TEMPERATURE (STORAGE):..... -54°C TO +85°C
- HUMIDITY:..... 100% RH, +30°C TO +60°C, MIL-STD 810, METHOD 507.4, 5 CYCLES
- FUNGUS:..... NO FUNGUS NUTRIENT MATERIALS ARE USED
- SALT FOG:..... MIL-STD 810, METHOD 509.4, 96 HOUR EXPOSURE
- VIBRATION (SINUSOIDAL):..... 0.2" (DOUBLE AMPLITUDE) FROM 5-14 Hz, 2.0 G FROM 14 TO 33 Hz
- VIBRATION (RANDOM):..... 0.30 g2/Hz FROM 15 Hz TO 2000 Hz, DECREASING 6 dB / OCTAVE STARTING AT 66 Hz, MIL-STD 810, METHOD 514.5, TABLE II & FIGURE 9 AND 516.5 TABLE 1
- FUNCTIONAL SHOCK:..... 80 g, 10 ms, MIL-S-901D, GRADE A (OPERATING OR NON-OPERATING)
- EXPLOSIVE ATMOSPHERE:..... MIL-STD 810, METHOD 511.4, PROCEDURE 1

PMI CONFIDENTIAL AND PROPRIETARY

UNLESS OTHERWISE SPECIFIED DIMENSIONS ARE IN INCHES
TOLERANCES ARE:
FRACTIONS ± — DECIMALS .XX ± 0.02, .XXX ± 0.01 — ANGLES ±

| APPROVALS | DATE |
|---|---|
| DRAWN DPD | 9/9/19 |
| REDRAWN | |
| ISSUED | |

PLANAR MONOLITHICS INDUSTRIES, INC.
7311-F GROVE ROAD
FREDERICK, MARYLAND 21704 USA
TEL: (301)-662-5019, FAX: (301)-662-1731
WEB: www.pmi-rf.com, EMAIL: sales@pmi-rf.com
ISO 9001 CERTIFIED

TITLE: OUTLINE
PIM-618-4CH-60-SFF

| SIZE | FSCM NO. | DWG NO. | REV. |
|---|---|---|---|
| B | 05XQ0 | PRELIMINARY | 1 |

SCALE 1:1 — SHEET 1 OF 1