REVISIONS				
ZONE	REV.	DESCRIPTION	DATE	APPROVED
	—	PRELIMINARY	09/26/17	

Description:

Low Noise Amplifier designed for Military and Industrial applications. This amplifier is supplied in our standard PE2 housing can be used as a SMA connectorized or a surface mount component. Other packages and connector types are available.

Specifications:

Frequency Range:	30MHz to 20GHz Min.
Gain:	10 dB Min., 16 dB Max.
Gain Flatness:	±2.5dB Max.
VSWR Input/Output:	2.0:1 Max.
Noise Figure:	10.0 dB Max. (0.03 to 0.5 GHz)
	7.0 dB Max. (0.5 to 2.0 GHz)
	4.0 dB Max. (2.0 to 20.0 GHz)
OP1dB:	+12 dBm Min.
DC Voltage Supply:	+12 VDC
DC Current Draw:	100 mA Max.
Connectors In/Out:	SMA Female
Finish:	Gold Plated

Features:

Internal Voltage Regulation
Unconditional Stability

Available Options:

Various Package types
Various Connector types
Temperature Compensation
Gain and Phase Matching
MIL-STD-883 Screening Available

Environmental Ratings:

Temperature:	-54°C to +95°C (Operating)
	-65°C to +125°C (Storage)
Humidity:	MIL-STD-202F, METHOD 103B COND B.
Shock:	MIL-STD-202F, METHOD 213B COND B.
Altitude:	MIL-STD-202F, METHOD 105C COND B.
Temperature Cycle:	MIL-STD-202F, METHOD 107D COND A

Note: The above specifications are subject to change or revision.

PE2 HOUSING WITH CARRIER

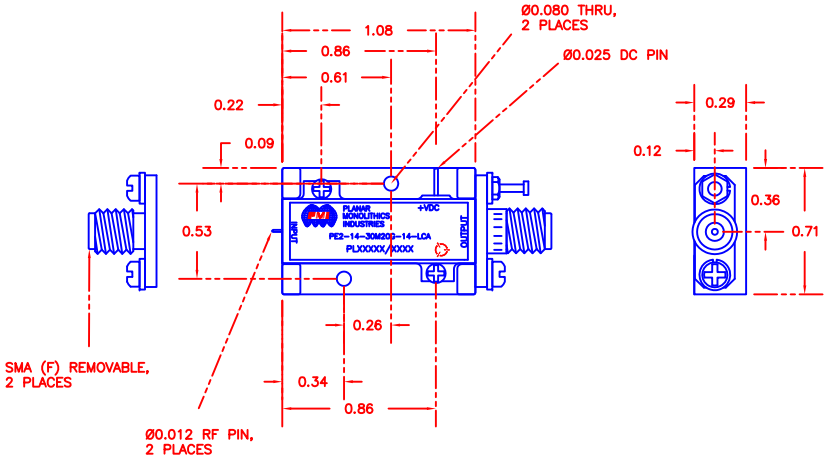

PE2 HOUSING WITHOUT CARRIER (SURFACE MOUNT)

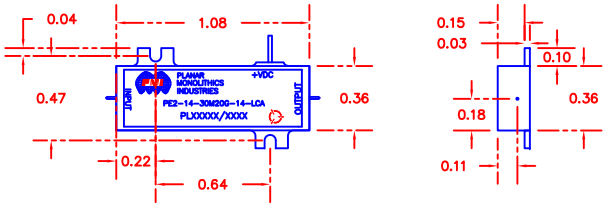

CONFIDENTIAL & PROPRIETARY

ALL DIMENSIONS ARE IN INCHES
TOLERANCES:
X.XX ±0.010
X.XXX ±0.005

PLANAR MONOLITHICS INDUSTRIES, INC.
7311-F GROVE ROAD
FREDERICK, MARYLAND 21704 USA
TEL: 301-662-5019 FAX: 301-662-1731
WEBSITE: www.pmi-rf.com
E-MAIL: sales@pmi-rf.com
ISO 9001:2008 CERTIFIED

APPROVALS	DATE
DRAWN sfk	06/20/12
REDRAWN EMF	09/26/17
ISSUED	

TITLE: PRODUCT FEATURE
PE2-14-30M20G-14-LCA

SIZE	FSCM NO.	DWG NO.	REV.
A	05XQ0	PRELIMINARY	—

SCALE N:S SHEET 1 OF 1