REVISIONS				
ZONE	REV.	DESCRIPTION	DATE	APPROVED
	A	ORIGINAL RELEASE	12/9/10	

Description:

Part Number 27001002 (Model Number PE2-20-5R25R4-15-SFF) is a 5.25 to 5.35 GHz low noise amplifier. This amplifier is supplied in our standard PE2 housing that can be used as a SMA connectorized or a surface mount component.

This model provides the following performance. Data is available upon request.

Specifications:

Frequency Range:	5.25 to 5.35 GHz
Gain:	21dB Typ.
Gain Flatness:	+/- 1.0dB Max.
Noise Figure:	4.0dB Max.
OP1dB:	+13dBm Min.
VSWR Input/Output:	2.0:1 Max.
DC Voltage Supply:	+12 to +15VDC
DC Current Draw:	300mA Max.
Connectors In/Out	SMA Female

Features:

Internal Voltage Regulation
Unconditional Stability
Standard Operating Temperature -55 to +85 Deg. C

Available Options:

Various Package types
Various Connector types
Temperature Compensation
Gain and Phase Matching
MIL-STD-883 Screening Available

Environmental Ratings:

Temperature:	-55 to +85 Deg. C (Operating)
	-65 to +125 Deg. C (Storage)
Humidity:	MIL-STD-202F, METHOD 103B COND B.
Shock:	MIL-STD-202F, METHOD 213B COND B.
Altitude:	MIL-STD-202F, METHOD 105C COND B.
Temperature Cycle:	MIL-STD-202F, METHOD 107D COND A

Note: The above specifications are subject to change or revision.

PE2 HOUSING WITH CARRIER

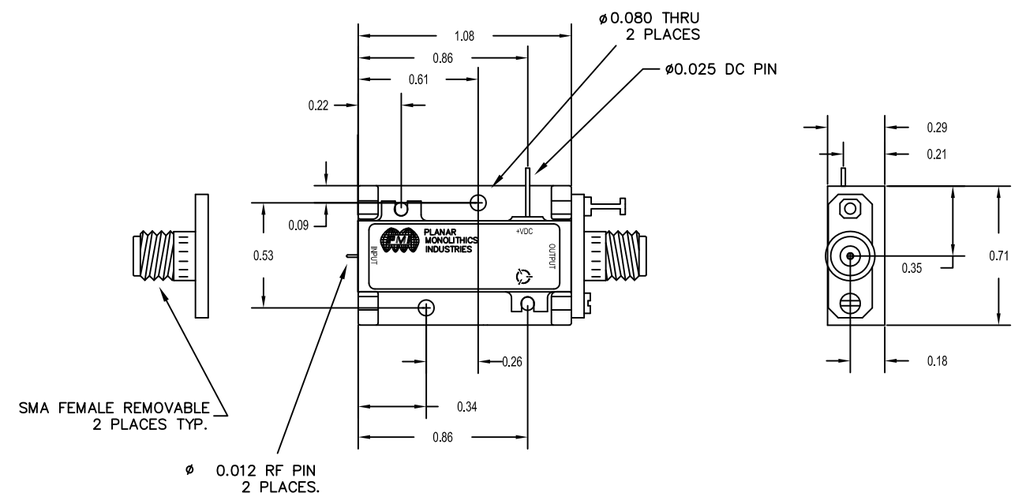

PE2 HOUSING WITHOUT CARRIER (SURFACE MOUNT)

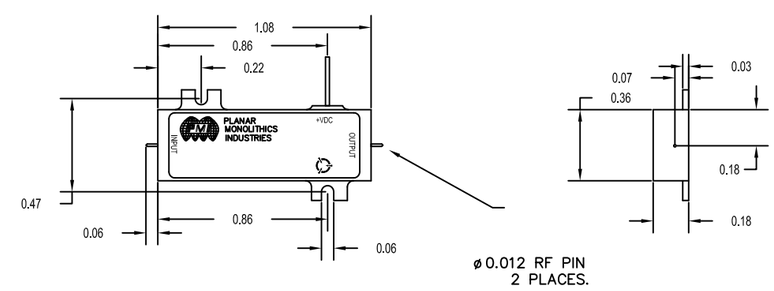

UNLESS OTHERWISE SPECIFIED
DIMENSIONS ARE IN INCHES
TOLERANCES ARE:
FRACTIONS ± DECIMALS .XX ± 0.010 .XXX ± 0.005 ANGLES ±

MATERIAL: 6061-T6 Aluminum
FINISH: GOLD PLATED
DO NOT SCALE DRAWING

PART NO.		
APPROVALS		DATE
DRAWN	DPD	3/9/10
Modified	SFK	12/9/10
ISSUED		

7311-F GROVE ROAD
FREDERICK, MARYLAND

TITLE PE2 Series Amplifier
PE2-20-5R25R4-15-SFF

SIZE	CAGE CODE	DWG NO.	REV.
B	05XQ0	27001002	A

SCALE N/A SHEET 1 OF 1