| REVISIONS | | | | |
|---|---|---|---|---|
| ZONE | REV. | DESCRIPTION | DATE | APPROVED |
| | 1 | ORIGINAL RELEASE | 07/19/13 | |
| | A1 | ECN # 13-0223 | 12/13/13 | |
| | B1 | SPEC UPDATES PER CUSTOMER | 6/24/2021 | |
| | | | | |

## Description:

PMI Model Number: PE2-34-1R251R75-12-SFF-1 is a 1.25 to 1.75 GHz low noise amplifier having the following specifiations.

## Specifications:

| | | |
|---|---|---|
| 1.1) | Frequency Range: | 1.25 to 1.75 GHz |
| 1.2) | Gain: | 34.0dB Min. |
| 1.3) | Gain Flatness: | +/- 1.5dB Max. |
| 1.4) | Noise Figure: | 8.0dB Max. |
| 1.5) | OP1dB: | 0dBm Min. |
| 1.6) | VSWR: | 2.0:1 Max. @ RF IN |
| | | 2.0:1 Max. @ RF OUT |
| 1.7) | Input Power: | +10dBm CW Max. |
| 1.8) | Output Power: | +13dBm Max. @ +10dBm CW Input |
| 1.9) | DC Voltage Supply: | +7 to +12VDC |
| 1.10) | DC Current Draw: | 200mA Max @ +10dBm CW Input |
| 1.11) | Connectors In/Out: | Removable SMA (F) |
| 1.12) | Finish: | Gold Plated |

All specifications to be met over the operating temperature range.

Table 1-1: Temperature Shock (Test Condition)

| Condition (Test Step) | Temp (°C) | | Time for Exposure (Minute) |
|---|---|---|---|
| 1 | -55 | +0/-5 | 30 Min |
| 2 | +25 | +10/-5 | 5 Max |
| 3 | +95 | +3/-0 | 30 Min |
| 4 | +25 | +10/-5 | 5 Max |

## MECHANICAL OUTLINE

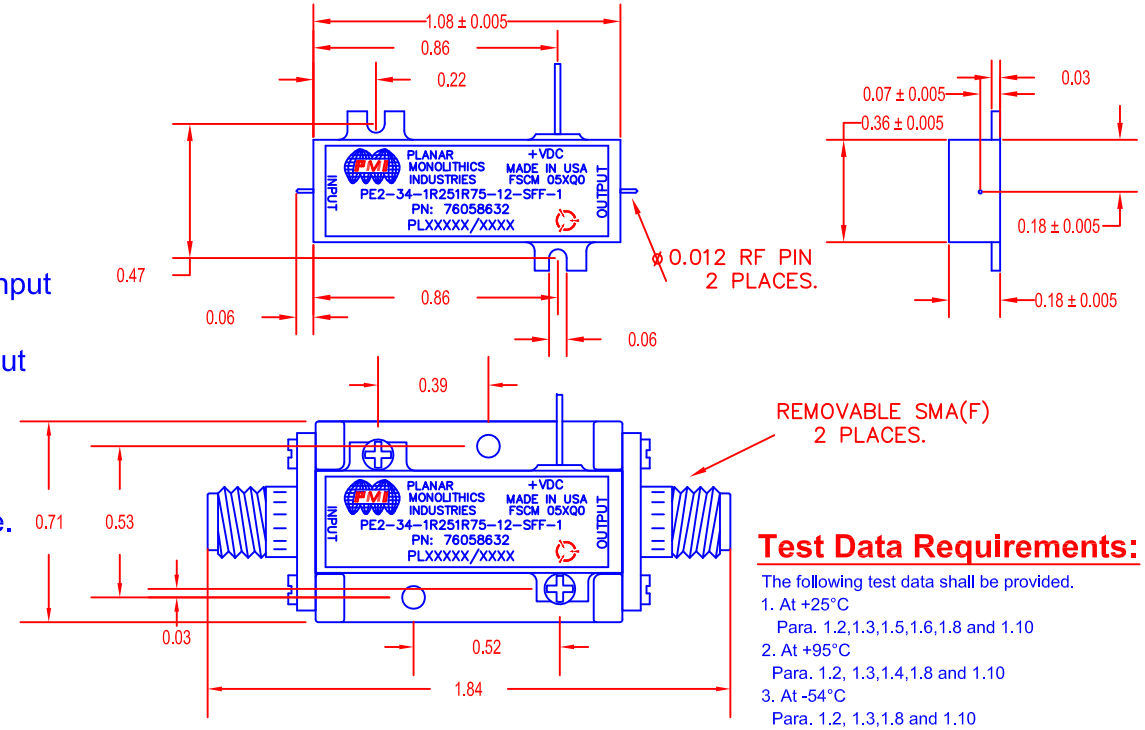


ALL DIMENSIONS ARE IN INCHES
TOLERANCES:
X.XX ±0.020
X.XXX ±0.010

## Test Data Requirements:

The following test data shall be provided.

1. At +25°C
   Para. 1.2,1.3,1.5,1.6,1.8 and 1.10
2. At +95°C
   Para. 1.2, 1.3,1.4,1.8 and 1.10
3. At -54°C
   Para. 1.2, 1.3,1.8 and 1.10

PMI CONFIDENTIAL AND PROPRIETARY

## Environmental Ratings:

Temperature: -54 to +95 Deg. C (Operating), MIL-E-5400K TABLE 1.Class3 Column I
-62 to +125 Deg. C (Storage), MIL-E-5400K TABLE 1.Class3 Column IX

Altitude: MIL-STD-202F, METHOD 105C COND C.
(70,000ft)

Vibration (Random): MIL-STD-202F, METHOD 214A, Table 214-1, TEST COND.H
* Test time: 4Hrs/Axis X each Axis (3 Axes) = 12 Hours

Shock: MIL-STD-202F, METHOD 213B COND A.
* Test method: 3 Axes/6 directions. Number of tests: 3 times for each direction = 18 times

Humidity: MIL-STD-202F, METHOD 106F
(90-98% RH)

Temperature Shock: MIL-STD-202F, METHOD 107G
(In accordance with TABLE 1 herein. Test Cycle = 10 Cycles)

Note: The above specifications are subject to change or revision.


**PLANAR MONOLITHICS INDUSTRIES, INC.**
7311-F GROVE ROAD
FREDERICK, MARYLAND 21704 USA
TEL: 301-662-5019 FAX: 301-662-1731
WEBSITE: www.pmi-rf.com
E-MAIL: sales@pmi-rf.com
ISO 9001 CERTIFIED


| APPROVALS | DATE |
|---|---|
| DRAWN ANG | 07/19/13 |
| CHECKED | |
| ISSUED | |

TITLE: PRODUCT FEATURE
PE2-34-1R251R75-12-SFF-1

| SIZE | FSCM NO. | DWG NO. | REV. |
|---|---|---|---|
| A | 05XQ0 | 27020261 | B1 |

SCALE N:S SHEET 1 OF 1