REVISIONS				
ZONE	REV.	DESCRIPTION	DATE	APPROVED
	–	ORIGINAL RELEASE	9/24/15	

DESCRIPTION:

PMI model number HP-2G-1780-SMA-FM is a Suspended Highpass filter with SMA female connector in SMA male connector out.

SPECIFICATIONS:

- PASSBAND: 2000 MHz TO 18000 MHz
- 3dB BANDWIDTH: 1780 MHz
- VSWR IN THE PASS BAND: 1.5:1 TYP.
- INSERTION LOSS (PASSBAND): 0.5 dB TYP.
- REJECTION AT 870 MHz: 80 dB MIN.
- CONNECTORS: SMA FEMALE/MALE CONNECTORS
- SIZE: 0.750" (L) x 0.750" (W) x 0.50" (H)
- WEIGHT: 1 OZ. TYP.

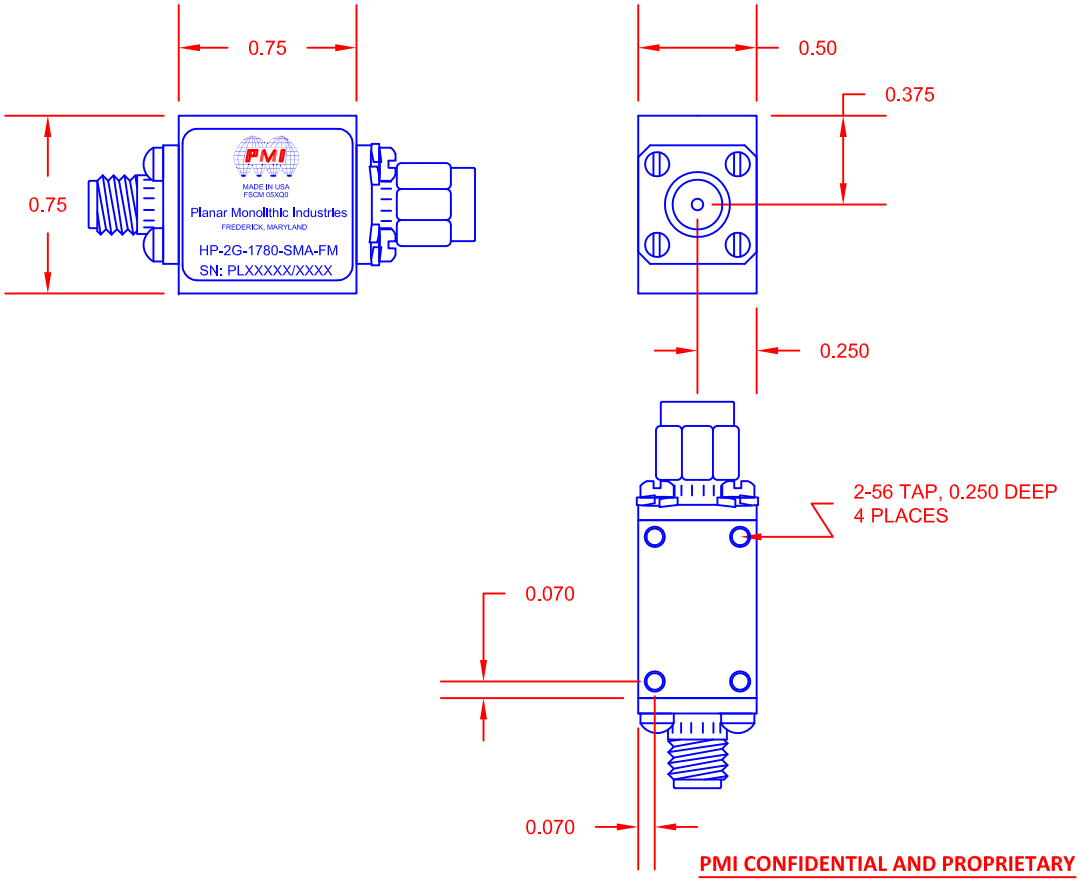

PMI CONFIDENTIAL AND PROPRIETARY

ENVIRONMENTAL RATINGS:

- TEMPERATURE: -55°C TO +85°C (OPERATING)
  -65°C TO +125°C (STORAGE)
- HUMIDITY: MIL-STD-202F, METHOD 103B COND. B
- SHOCK: MIL-STD-202F, METHOD 213B COND. B
- VIBRATION: MIL-STD-202F, METHOD 204D COND. B
- TEMPERATURE CYCLE: MIL-STD-202F, METHOD 107

ALL DIMENSIONS ARE IN INCHES
TOLERANCES:
X.XX ±0.020
X.XXX ±0.010

PLANAR MONOLITHICS INDUSTRIES, INC.
7311-F GROVE ROAD
FREDERICK, MARYLAND 21704 USA
TEL: 301-662-5019 FAX: 301-662-1731
WEBSITE: www.pmi-rf.com
E-MAIL: sales@pmi-rf.com
ISO 9001 CERTIFIED

APPROVALS	DATE
DRAWN S PALACIO	9/24/15
CHECKED	
ISSUED	

TITLE: PRODUCT FEATURE HP–2G–1780–SMA–FM

SIZE	FSCM NO.	DWG NO.	REV.
A	05XQ0	PRELIMINARY	–

SCALE N:S | SHEET 1 OF 1

NOTE: THE ABOVE SPECIFICATIONS ARE SUBJECT TO CHANGE OR REVISION