REVISIONS				
ZONE	REV.	DESCRIPTION	DATE	APPROVED
	–	PRELIMINARY	02/03/15	KM

DESCRIPTION

PMI MODEL DTA-5D2G5D8G-60-10B-SFF IS A 10-BIT DIGITAL CONTROLLED ATTENUATOR THAT OPERATES OVER 5.2 TO 5.8GHz AND OFFERS 60dB OF ATTENUATION. THE INSERTION LOSS IS 4dB MAXIMUM AND OPERATES FROM +/-15VDC.

SPECIFICATIONS

- FREQUENCY RANGE: 5.2 TO 5.8GHz
- ATTENUATION: 60dB MIN.
- PHASE VARIATION: 0-20dB; +/-5° MAX.
  20-40dB; +/-10° MAX.
  40-60dB; +/-20° MAX.
- INSERTION LOSS: 4dB MAX.
- VSWR: 2.0:1 MAX.
- ACCURACY OF ATTENUATION: +/-1.0dB MAX. (0-20dB)
  +/-1.5dB MAX. (20-40dB)
  +/-2.0dB MAX. (40-60dB)
- AMPLITUDE FLATNESS: +/0.4dB MAX. (0-20dB)
  +/-0.6dB MAX. (20-32dB)
  +/-1.5dB MAX. (32-60dB)
- MONOTONICITY: GUARANTEED
- MAX. RF INPUT(OPERATING): 50mW
- MAX. RF INPUT(SURVIVAL): 2W@+25°C, 0.8W@+110°C
- CONTROL: 10-BIT TTL
- POWER SUPPLY: +15V, -15V
- OPERATING TEMPERATURE: 0 TO +60°C

MECHANICAL OUTLINE

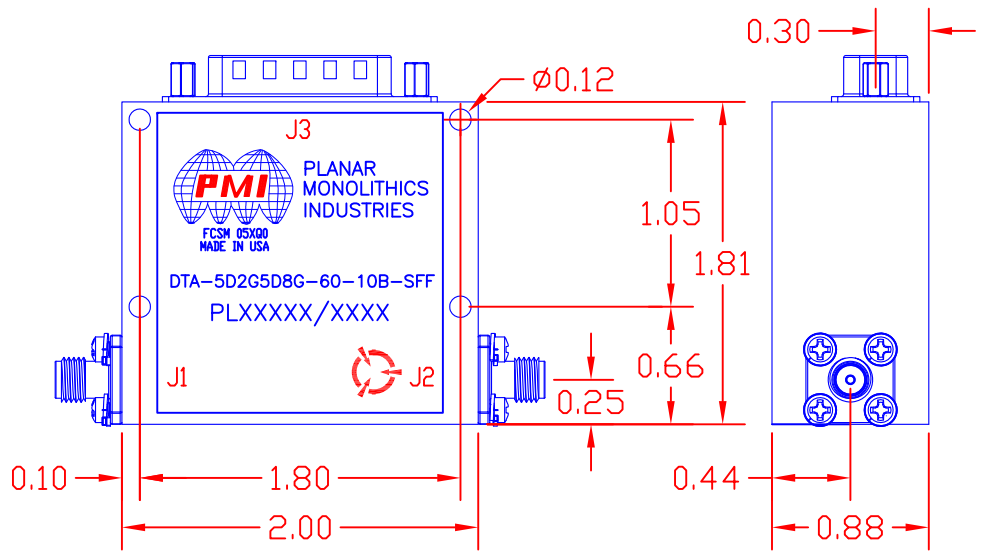

PIN NO.	J3 PIN FUNCTIONS
1	GND
2	NOT CONNECTED
3	0.13dB
4	GND
5	0.25dB
6	0.5dB
7	1dB
8	2dB
9	4dB
10	8dB
11	16dB
12	32dB (MSB)
13	+V
14	-V
15	0.06dB (LSB)

ALL DIMENSIONS ARE IN INCHES
TOLERANCES:
X.XX ±0.020
X.XXX ±0.010

ENVIRONMENTAL RATINGS

- **TEMPERATURE:** -55°C TO + 71°C (OPERATING)
  -55°C TO +125°C (STORAGE)
- **HUMIDITY:** MIL-STD-202F, METHOD 103B COND. B
- **SHOCK:** MIL-STD-202F, METHOD 213B COND. B
- **VIBRATION:** MIL-STD-202F, METHOD 204D COND. B
- **ALTITUDE:** MIL-STD-202F, METHOD 105C COND. B
- **TEMPERATURE CYCLE:** MIL-STD-202F, METHOD 107D COND. A

NOTE: SPECIFICATIONS WILL VARY OVER OPERATING TEMPERATURE
NOTE: THE ABOVE SPECIFICATIONS ARE SUBJECT TO CHANGE OR REVISION

PMI CONFIDENTIAL AND PROPRIETARY

PLANAR MONOLITHICS INDUSTRIES, INC.
7311-F GROVE ROAD
FREDERICK, MARYLAND 21704 USA
TEL: 301-662-5019 FAX: 301-662-1731
WEBSITE: www.pmi-rf.com
E-MAIL: sales@pmi-rf.com
ISO 9001 CERTIFIED

APPROVALS	DATE
DRAWN MBerry	02/03/15
CHECKED	
ISSUED	

TITLE: 5.2 to 5.8GHz 10-BIT DIGITAL ATTENUATOR
DTA-5D2G5D8G-60-10B-SFF

SIZE	FSCM NO.	DWG NO.	REV.
A	05XQ0	PRELIMINARY	–

SCALE N:S SHEET 1 OF 1