ZONE	REV.	DESCRIPTION	DATE	APPROVED
	A1	ORIGINAL RELEASE	1/16/2026	

DESCRIPTION:

PMI MODEL NUMBER QSM-06-15R5-5-19-SFF IS A 0.05 TO 6 GHz AMPLIFIER. THIS AMPLIFIER IS SUPPLIED IN OUR STANDARD PEAFS3 HOUSING THAT CAN BE USED AS A SMA CONNECTORIZED OR A SURFACE MOUNT COMPONENT.

SPECIFICATIONS:

- FREQUENCY RANGE:..... 0.05 TO 6 GHz
- GAIN:..... 16 dB TYP, 13 dB MIN
- GAIN FLATNESS:..... ± 2 dB MAX
- NOISE FIGURE:..... 7 dB MAX
- OP1dB:..... 10 dBm MIN
- Psat:..... 20 dBm TYP, 19 dBm MIN
- HARMONICS:..... -29 dBc MIN @-10dBm INPUT POWER
  -13 dBc MIN @+5dBm INPUT POWER
  -5 dBc MIN @+20dBm INPUT POWER
- OIP3:..... +18 dBm MIN
- MAX RF INPUT POWER:..... +24 dBm CW MAX
- VSWR (INPUT/OUTPUT):..... 2.0:1 MAX
- DC VOLTAGE SUPPLY:..... +12V to +15V @200 mA MAX (Idq)
  +12V to +15V @300 mA MAX (Psat)
- CONNECTORS:..... SMA FEMALE
- FINISH:..... GOLD PLATED

ENVIRONMENTAL RATINGS:

- TEMPERATURE:..... -40°C TO +85°C (OPERATING)
  -55°C TO +125°C (STORAGE)
- HUMIDITY:..... MIL-STD-202, METHOD 103 COND. B
- SHOCK:..... MIL-STD-202, METHOD 213 COND. B
- VIBRATION:..... MIL-STD-202, METHOD 204 COND. B
- ALTITUDE:..... MIL-STD-202, METHOD 105 COND. B
- TEMPERATURE CYCLE:..... MIL-STD-202, METHOD 107 COND. A

NOTE: SPECIFICATIONS WILL VARY OVER TEMPERATURE
NOTE: THE ABOVE SPECIFICATIONS ARE SUBJECT TO CHANGE OR REVISION

HOUSING WITH CARRIER

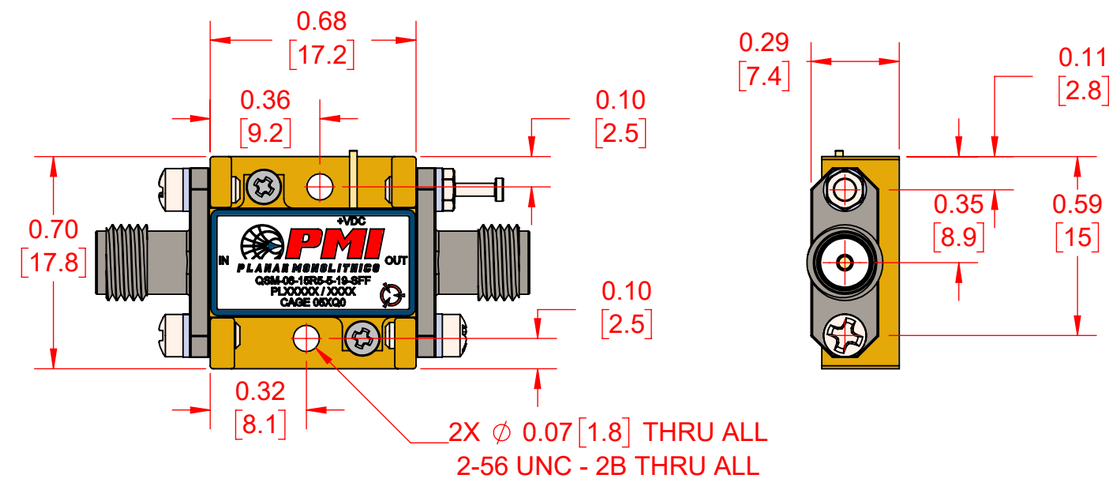

HOUSING WITHOUT CARRIER (SURFACE MOUNT)

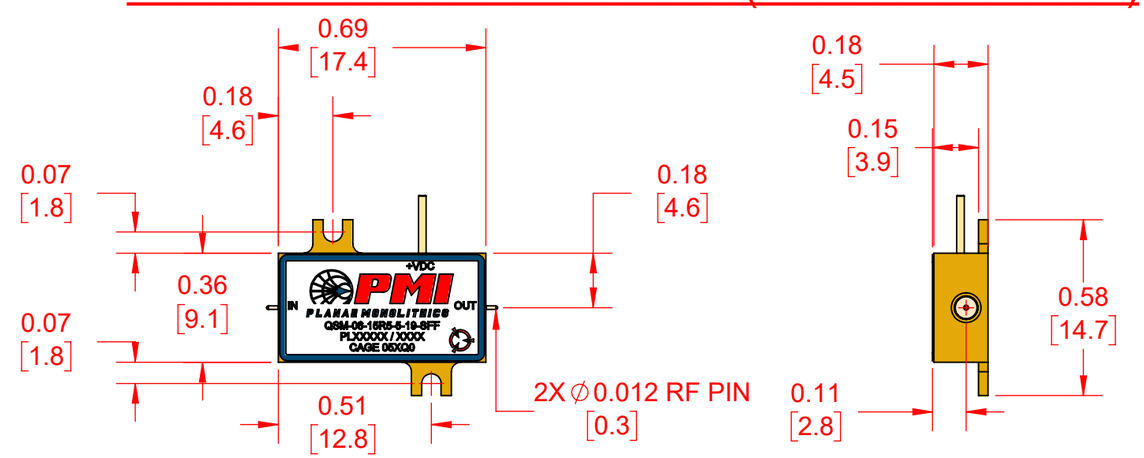

PMI CONFIDENTIAL AND PROPRIETARY

UNLESS OTHERWISE SPECIFIED
DIMENSIONS ARE IN INCHES
TOLERANCES ARE:
FRACTIONS ± | DECIMALS .XX ± 0.02 .XXX ± 0.01 | ANGLES ±

APPROVALS	DATE
DRAWN I.Cossio	7/7/2026
REDRAWN	
ISSUED	

PMI
PLANAR MONOLITHICS
7309-A GROVE ROAD FREDERICK MARYLAND 21704 USA
TEL: (301) 662-5019, FAX: (301) 662-1731
WEB: WWW.QUANTICPMI.COM, EMAIL: SALES@QUANTICPMI.COM
ISO 9001 CERTIFIED

TITLE: OUTLINE
QSM-06-15R5-5-19-SFF

SIZE	FSCM NO.	DWG NO.	REV.
B	05XQ0	27054080	A1

SCALE 4:1 SHEET 1 OF 1