POWER AMPLIFIERS

Power Amplifier, Model SPU-20-20W

Description:

Spacek Labs' Model SPU-20-20W is a MMIC-based, power amplifier which operates from 40 to 60 GHz. Input/output ports are WR-19 UG 383/U Mod flanges. P1dB is 19 dBm (typ) with 20 dB of gain (typ). Bias voltage is +8 to +12 VDC.

Features:

- Balanced circuitry
- Unconditionally stable
- Removable 2.92mm (K) coax or waveguide flanges.
- Internal voltage regulator
- Heat sink with DC fan included, removable for integration.

Electrical Specifications:

Description	Min.	Typ.	Max.
Frequency	40 GHz	-	60 GHz
Gain	16 dB	20 dB	-
P-1dB	-	19 dBm	-
VSWR In/Out		2:1 typ	
Bias Voltage		+8 to +12 VDC	
Current		800 mA	

Mechanical Specifications:

Description	Specification
Connectors I/O	UG 383/U Mod / UG 383/U Mod
Dimensions OA	See outline
Material	Brass / Aluminum
Finish	Gold / Iridite
Weight	2.0 oz

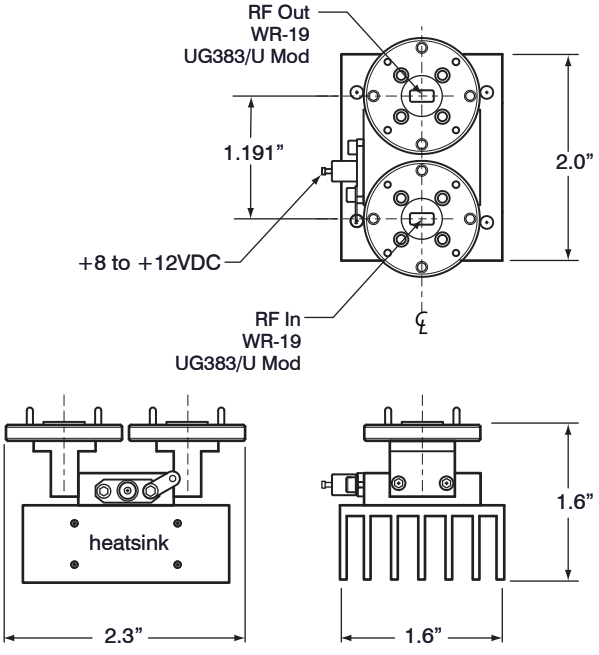

OUTLINE: DIMENSIONS IN INCHES (NOT TO SCALE)

Spacek Labs, Inc. 212 East Gutierrez Street, Santa Barbara, CA 93101
www.spaceklabs.com | Phone: 805 564-4404 | Fax: 805 966-3249 | Email: sales@spaceklabs.com

Notes: Product data is periodically updated to reflect product / raw material / process / testing changes. This data should not be used as guaranteed specifications. Please contact Spacek Labs to make sure you have the most current data.

© Spacek Labs Inc. 2018