Typical Characteristics
On
LM-618-10-1W-SHS-1-M

PMI MODEL: LM-618-10-1 W-SHS-1-M IS A HIGH SPEED, HIGH POWER HARD DIODE-LIMITER. IT OPERATES OVER THE FREQUENCY RANGE OF 6.0 TO 18.0GHz, WITH A MALE SMA ON THE INPUT RF CONNECTOR.

June 29, 2017

Designed By: Dr. Ashok Gorwara

Tested & Reported By:
Sebastian Palacio & Alfredo Lopez

7311-F Grove Road Frederick, MD 21704 USA Phone: (301)662-5019 Fax: (301)662-1731
Email: sales@pmi-rf.com

Typical Characteristics
On
LM-618-10-1W-SHS-1-M

REVISIONS				
ZONE	REV.	DESCRIPTION	DATE	APPROVED
	A1	ORIGINAL RELEASE	03/20/17	

DESCRIPTION

PMI MODEL: LM–618–10–1 W–SHS–1–M IS A HIGH SPEED, HIGH POWER HARD DIODE–LIMITER. IT OPERATES OVER THE FREQUENCY RANGE OF 6.0 TO 18.0GHz, WITH A MALE SMA ON THE INPUT RF CONNECTOR.

SPECIFICATIONS

- FREQUENCY RANGE: 6.0 TO 18.0 GHz
- INSERTION LOSS @–20dBm INPUT: 2.0dB MAX, 1.5dB TYP
- VSWR @–20dBm INPUT: 2.0:1 MAX, 1.5:1 TYP
- LEAKAGE @ 1 WATT CW INPUT: +14dBm MAX, +10dBm TYP
- SPEED: 10ns
- INPUT POWER: 1 WATT CW, 100 WATTS PEAK, 1us PULSE, 0.1% DUTY CYCLE DERATED TO 20% AT 125°C
- LIMITING THRESHOLD: +10dBm TYP
- CONNECTORS: SMA: RF IN=MALE, RF OUT=FEMALE
- FINISH: PAINTED BLUE
- SIZE: 0.5" X 0.5" X 0.22"

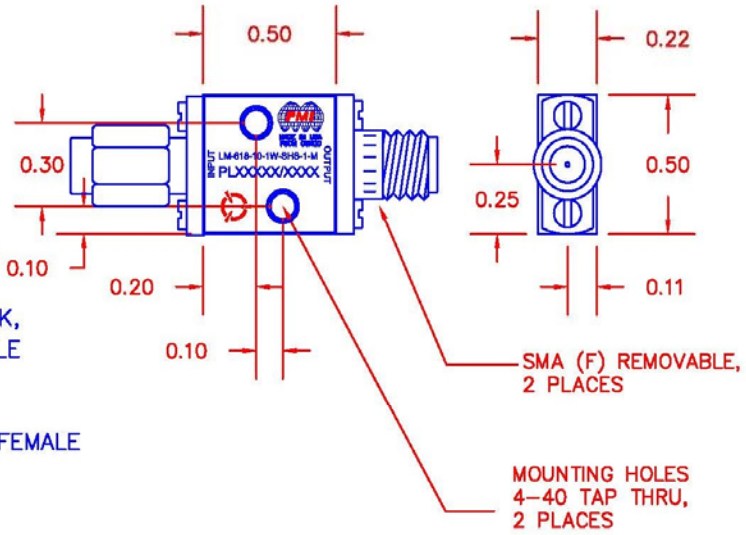

PMI CONFIDENTIAL AND PROPRIETARY

ENVIRONMENTAL RATINGS

- **TEMPERATURE:** –54°C TO +85°C (OPERATING)
  –65°C TO +125°C (STORAGE)
- **HUMIDITY:** MIL–STD–202F, METHOD 103B COND. B
- **SHOCK:** MIL–STD–202F, METHOD 213B COND. B
- **VIBRATION:** MIL–STD–202F, METHOD 204D COND. B
- **ALTITUDE:** MIL–STD–202F, METHOD 105C COND. B
- **TEMPERATURE CYCLE:** MIL–STD–202F, METHOD 107D COND. A

NOTE: SPECIFICATIONS WILL VARY OVER OPERATING TEMPERATURE
NOTE: THE ABOVE SPECIFICATIONS ARE SUBJECT TO CHANGE OR REVISION

ALL DIMENSIONS ARE IN INCHES
TOLERANCES:
X.XX ±0.020
X.XXX ±0.010
WEIGHT: X.XX oz.

PLANAR MONOLITHICS INDUSTRIES, INC.
7311-F GROVE ROAD
FREDERICK, MARYLAND 21704 USA
TEL: 301-662-5019 FAX: 301-662-1731
WEBSITE: www.pmi-rf.com
E-MAIL: sales@pmi-rf.com
ISO 9001 CERTIFIED

APPROVALS	DATE
DRAWN JPU	03/20/17
CHECKED	
ISSUED	

TITLE: PRODUCT FEATURE LM–618–10–1W–SHS–1–M

SIZE	FSCM NO.	DWG NO.	REV.
A	05XQ0	27032246	A1

SCALE N:S SHEET 1 OF 1

Typical Characteristics
On
LM-618-10-1W-SHS-1-M

TEST. ITEM NO	PARAMETERS	SPECIFIED VALUE	TEST RESULTS	QA QC
1	Frequency Range:	6.0 GHz TO 18 GHz	**0.5 GHz TO 18GHz (See Plot)**	
2	Insertion Loss @ -20dBm Input:	2.0 dB Max 1.5 dB Typ	**1.96 dB (See Plot)**	
3	VSWR @ -20 dBm Input:	2.0:1 Max 1.5:1 Typ	**1.60:1 (See Plot)**	
4	Leakage @ 1 Watt CW Input:	+14dBm Max +10dBm Typ	**+13 dBm (See Plot)**	
5	Speed:	10ns	**10 ns (See Plot)**	
6	Input Power:	1 Watt CW, 100 Watts Peak, 1us Pulse, 0.1% Duty Cycle, Derated to 20% @ 125°C	**1 Watt (See Graph)**	
7	Limiting Threshold:	+10dBm Typ	**+7 dBm (See Plot)**	

7311-F Grove Road Frederick, MD 21704 USA Phone: (301)662-5019 Fax: (301)662-1731
Email: sales@pmi-rf.com

Typical Characteristics
On
LM-618-10-1W-SHS-1-M

Insertion Loss & Return Loss

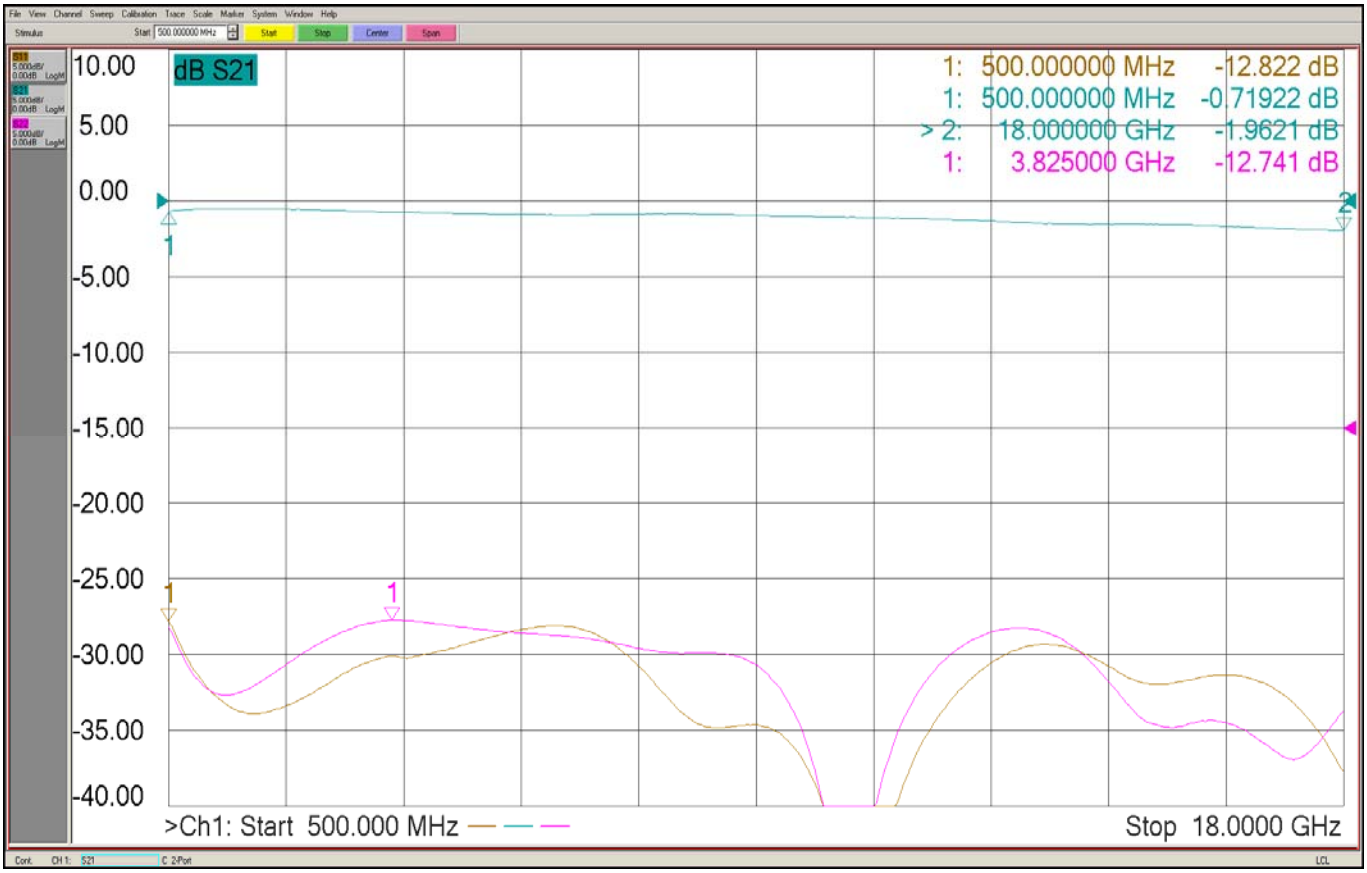

7311-F Grove Road Frederick, MD 21704 USA Phone: (301)662-5019 Fax: (301)662-1731
Email: sales@pmi-rf.com

Typical Characteristics
On
LM-618-10-1W-SHS-1-M

Input Power vs. Output Power

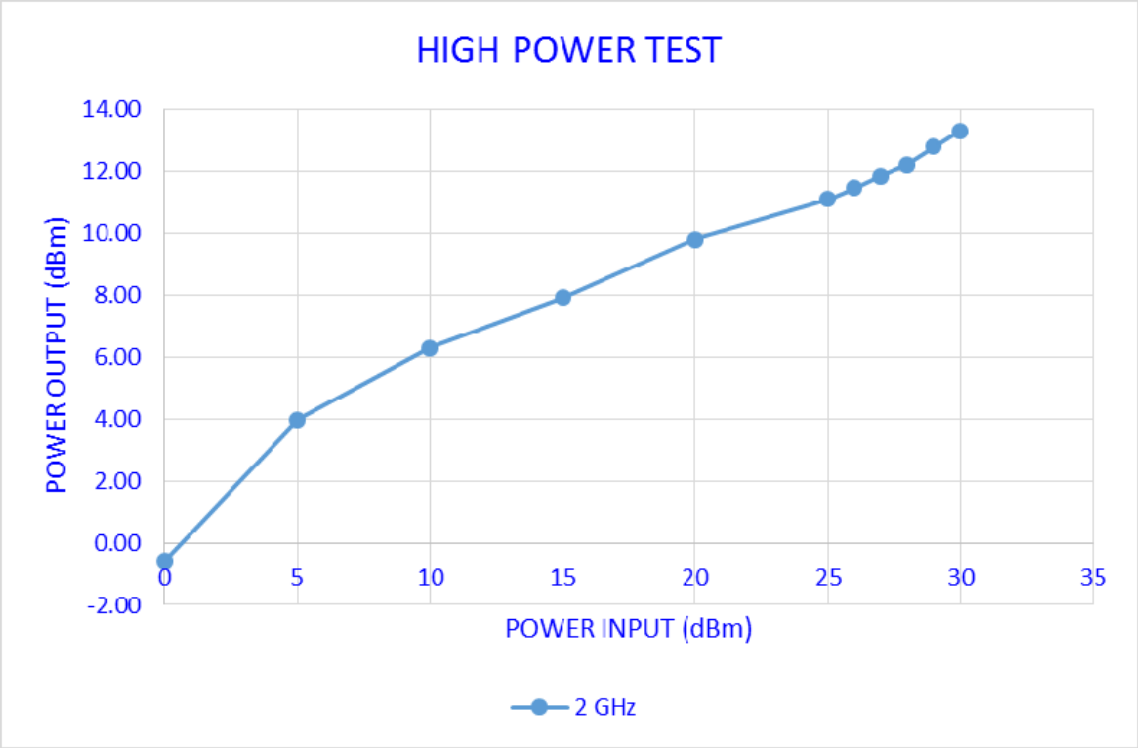

POWER INPUT (dBm)	POWER OUTPUT (dBm)
0	-0.60
5	3.96
10	6.30
15	7.90
20	9.80
25	11.10
26	11.45
27	11.85
28	12.20
29	12.78
30	13.30

7311-F Grove Road Frederick, MD 21704 USA Phone: (301)662-5019 Fax: (301)662-1731
Email: sales@pmi-rf.com

Typical Characteristics
On
LM-618-10-1W-SHS-1-M

Recovery

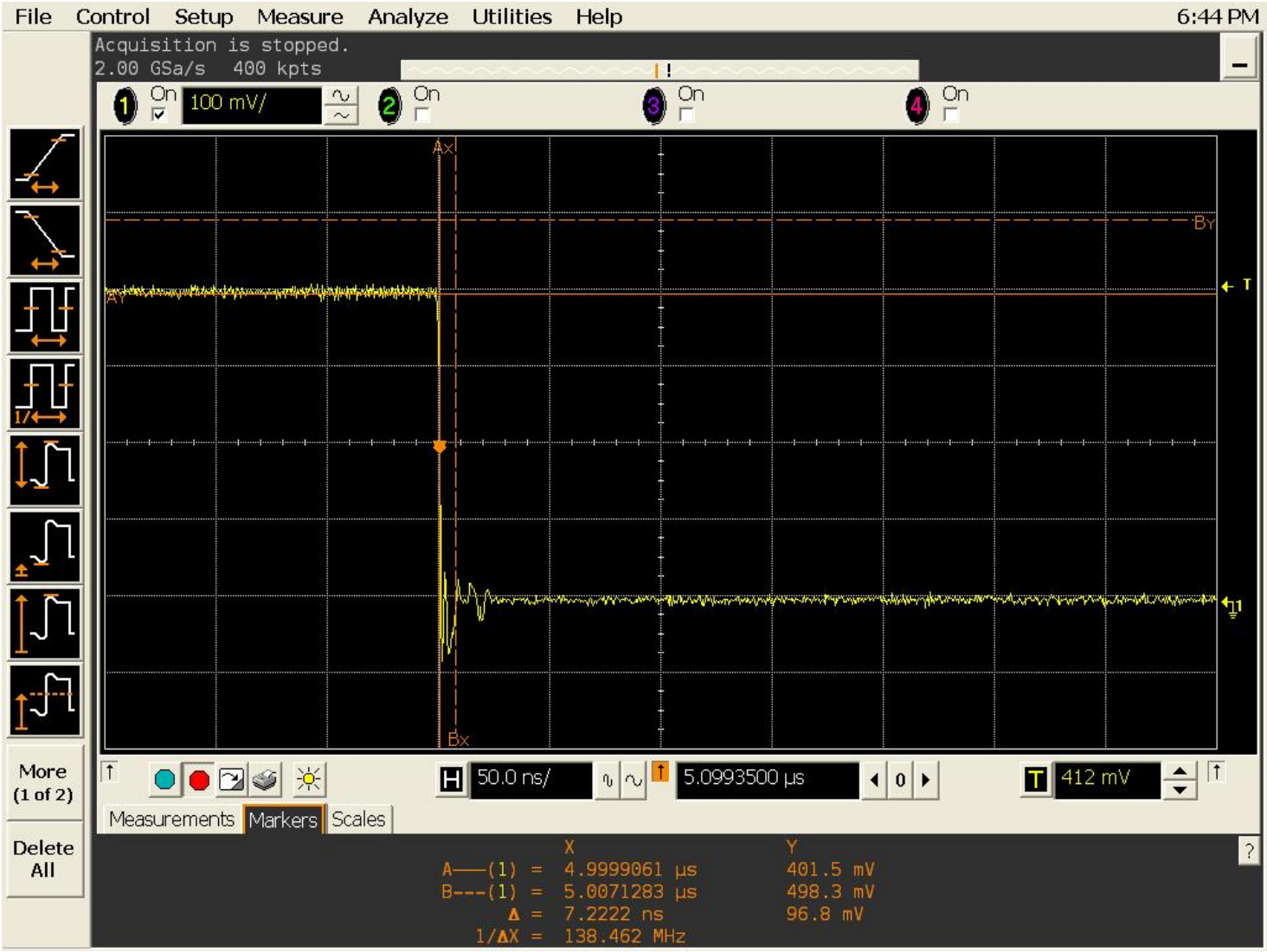

7311-F Grove Road Frederick, MD 21704 USA Phone: (301)662-5019 Fax: (301)662-1731
Email: sales@pmi-rf.com

Typical Characteristics
On
LM-618-10-1W-SHS-1-M

Peak Leakage

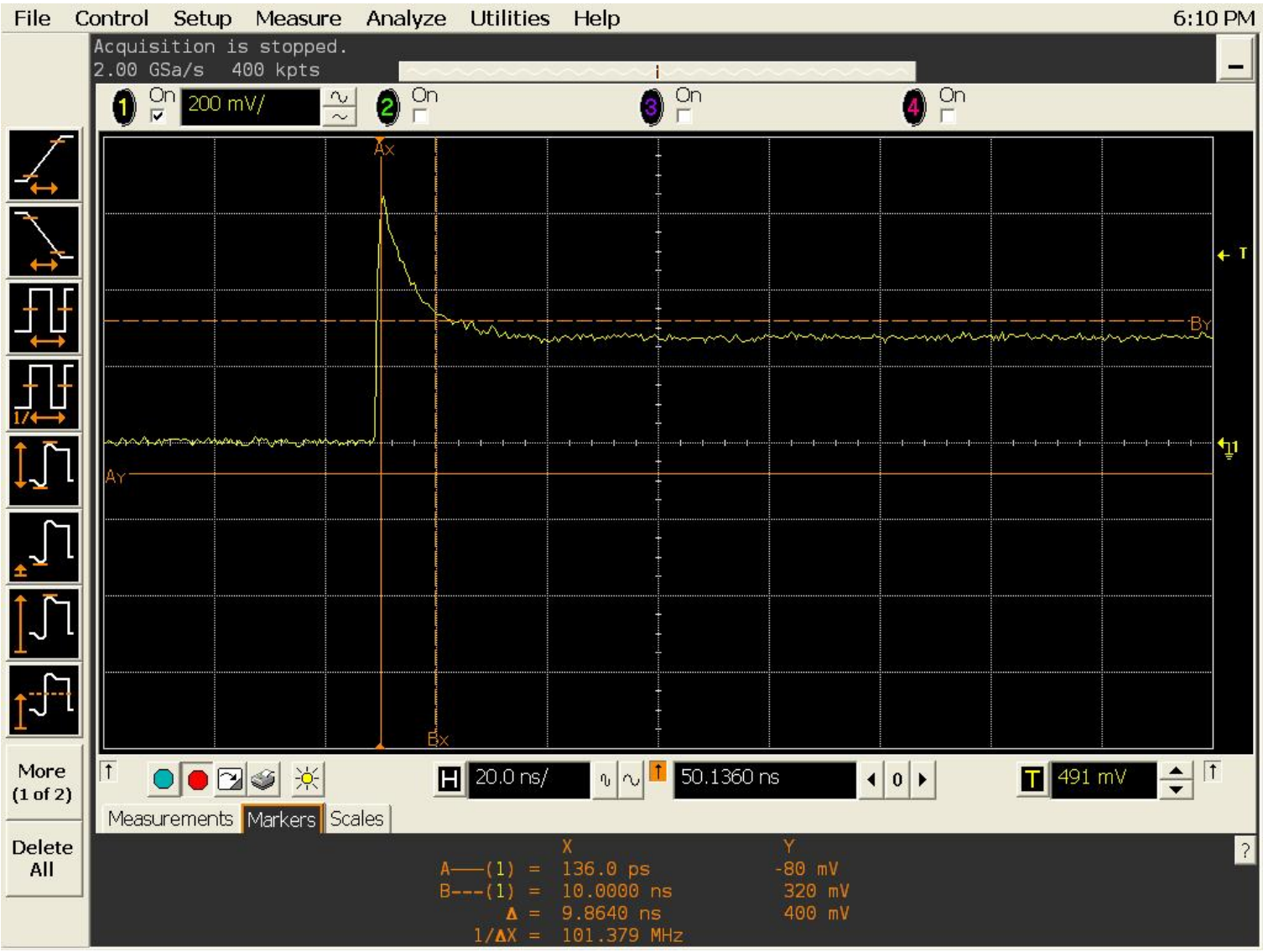

7311-F Grove Road Frederick, MD 21704 USA Phone: (301)662-5019 Fax: (301)662-1731
Email: sales@pmi-rf.com

Typical Characteristics
On
LM-618-10-1W-SHS-1-M

Full Pulse Response

7311-F Grove Road Frederick, MD 21704 USA Phone: (301)662-5019 Fax: (301)662-1731
Email: sales@pmi-rf.com