Typical Characteristics
on
P1T-2G6G-25-6NS-ECL

PMI MODEL NUMBER P1T-2G6G-25-6NS-ECL IS AN ULTRA HIGH SPEED SINGLE POLE SINGLE THROW SWITCH COVERING 2 TO 6 GHz. THE ISOLATION IS BETTER THAN 25dB AND THE SWITCHING SPEED IS 6 ns USING EXTERNAL ECL CONTROLS. NO ADDITIONAL POWER SUPPLY IS REQUIRED.

April 3, 2019
Designed By: Dr. Ashok (Ash) Gorwara
Tested By: Dave Durbin

7311-F Grove Road Frederick, MD 21704 USA Phone: (301)662-5019 Fax: (301)662-1731
Email: sales@pmi-rf.com

Typical Characteristics
on
P1T-2G6G-25-6NS-ECL

Table of Contents

Product Feature…….. Page 3

Summary Test Data…….. Page 4

Insertion Loss and Return Loss…… Page 5

Isolation…… Page 6

Switching Speed…….. Pages 7 – 10

7311-F Grove Road Frederick, MD 21704 USA Phone: (301)662-5019 Fax: (301)662-1731
Email: sales@pmi-rf.com

Typical Characteristics on P1T-2G6G-25-6NS-ECL

Product Feature

DESCRIPTION

PMI MODEL NUMBER P1T-2G6G-25-6NS-ECL IS AN ULTRA HIGH SPEED SINGLE POLE SINGLE THROW SWITCH COVERING 2 GHz TO 6 GHz. THE ISOLATION IS BETTER THAN 25 dB AND THE SWITCHING SPEED IS 6 ns USING EXTERNAL ECL CONTROLS. NO ADDITIONAL POWER SUPPLY IS REQUIRED.

SPECIFICATIONS

- FREQUENCY RANGE: — 2 TO 6 GHz
- INSERTION LOSS: — 5 dB MAX
- ISOLATION: — 25 dB MIN
- VSWR (IN/OUT): — 2:1 MAX
- SWITCHING SPEED: — 6 ns TYP
- CONTROL: — ECL CONTROL
  ECL+ "1", ECL− "0" INSERTION LOSS
  ECL+ "0", ECL− "1" ISOLATION
- RECOMMENDED DRIVER CIRCUIT:
  MC10ELT24DG OR EQUIVALENT ECL DRIVER WITH 50 OHM TERMINATIONS TO −2V ON ECL+ AND ECL−
  KEEP CONNECTIONS TO SWITCH SHORT

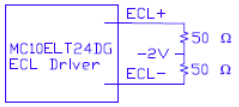

- CONNECTORS: — SMA (F) REMOVABLE
- SIZE — (L) 0.69" X (W) 0.70" X (H) 0.29"
  EXCLUDING CONNECTORS
- FINISH — GOLD PLATED

ENVIRONMENTAL RATINGS

- **TEMPERATURE:** — −40°C TO +85°C (OPERATING)
  −40°C TO +85°C (STORAGE)
- **HUMIDITY:** — MIL−STD−202F, METHOD 103B COND. B
- **SHOCK:** — MIL−STD−202F, METHOD 213B COND. B
- **ALTITUDE:** — MIL−STD−202F, METHOD 105C COND. B
- **TEMPERATURE CYCLE:** — MIL−STD−202F, METHOD 107D COND. A

NOTE: SPECIFICATIONS WILL VARY OVER OPERATING TEMPERATURE
NOTE: THE ABOVE SPECIFICATIONS ARE SUBJECT TO CHANGE OR REVISION

ALL DIMENSIONS ARE IN INCHES
TOLERANCES:
X.XX ±0.02
X.XXX ±0.010

REVISIONS				
ZONE	REV.	DESCRIPTION	DATE	APPROVED
	A1	ORIGINAL RELEASE	9/20/19	

HOUSING WITH CARRIER

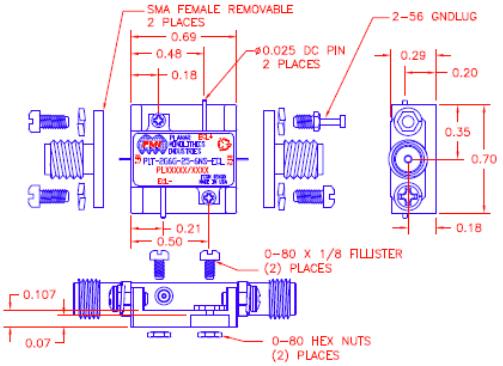

HOUSING WITHOUT CARRIER (SURFACE MOUNT)

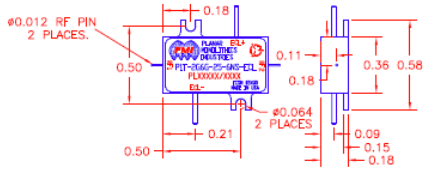

PMI CONFIDENTIAL AND PROPRIETARY

PLANAR MONOLITHICS INDUSTRIES, INC.
7311-F GROVE ROAD
FREDERICK, MARYLAND 21704 USA
TEL: 301-662-5019 FAX: 301-662-1731
WEBSITE: www.pmi-rf.com
E-MAIL: sales@pmi-rf.com
ISO 9001 CERTIFIED

APPROVALS	DATE
DRAWN DPD	9/20/19
CHECKED	
ISSUED	

TITLE: PRODUCT FEATURE
P1T−2G6G−25−6NS−ECL

SIZE	FSCM NO.	DWG NO.	REV.
A	05XQ0	27035639	A1

SCALE N:S SHEET 1 OF 1

Typical Characteristics on P1T-2G6G-25-6NS-ECL

Summary Test Data

TEST. ITEM NO	PARAMETERS	SPECIFIED VALUE	TEST RESULTS	QA QC
1	Frequency Range:	2 GHz TO 6 GHz	**2 GHz TO 6 GHz**	
2	Insertion Loss:	5 dB Max	**4.9 dB**	
3	VSWR:	2 : 1 Max	**1.98 : 1**	
4	Isolation:	25 dB Min	**29.2 dB**	
5	Switching Speed	6 ns Typ	**6 ns See Plot**	
6	Control	ECL+ “1” ECL- “0” : Insertion Loss ECL+ “0” ECL- “1” : Isolation	**Pass**	

7311-F Grove Road Frederick, MD 21704 USA Phone: (301)662-5019 Fax: (301)662-1731
Email: sales@pmi-rf.com

Typical Characteristics
on
P1T-2G6G-25-6NS-ECL

Insertion Loss and Return Loss

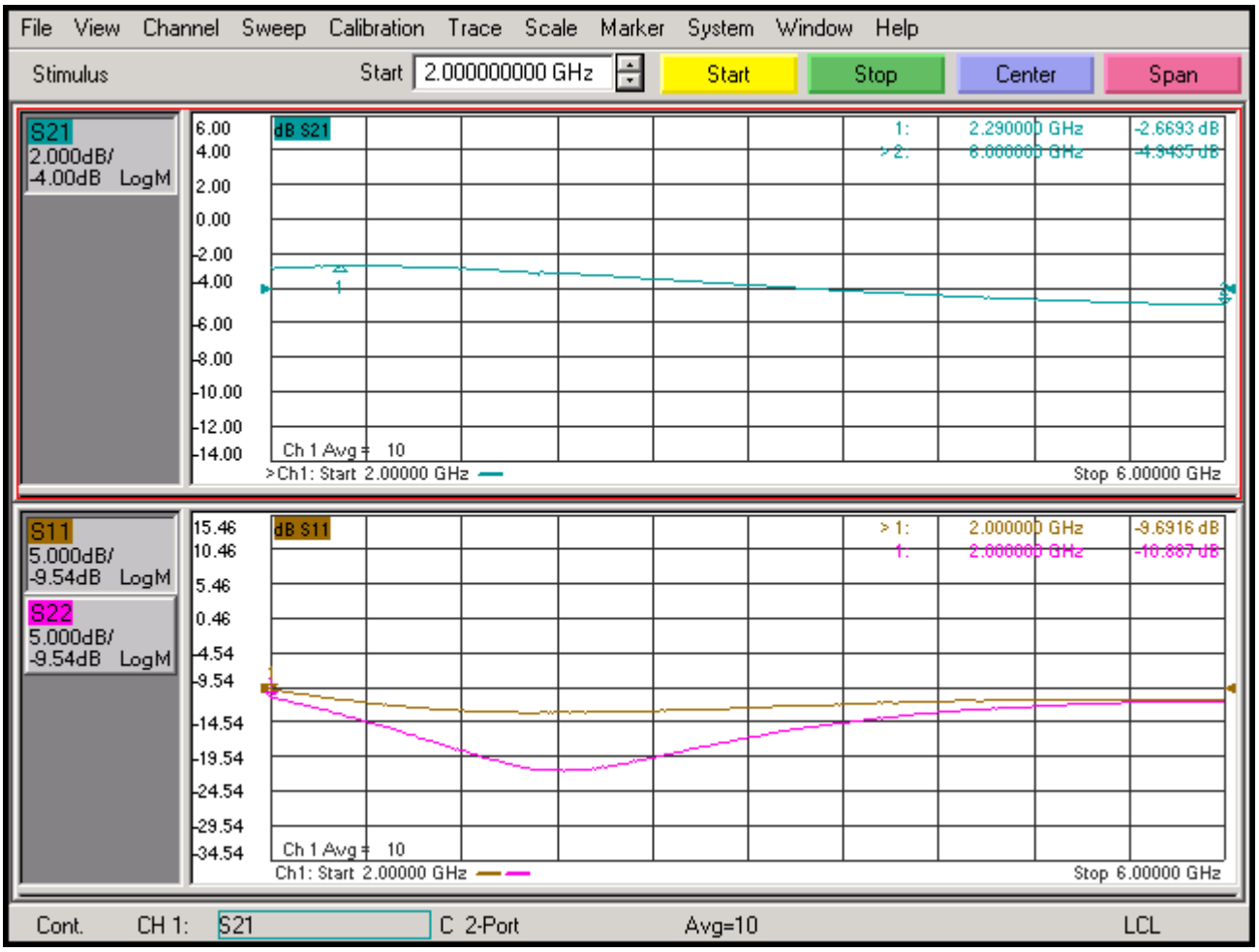

7311-F Grove Road Frederick, MD 21704 USA Phone: (301)662-5019 Fax: (301)662-1731
Email: sales@pmi-rf.com

Typical Characteristics
on
P1T-2G6G-25-6NS-ECL

Isolation

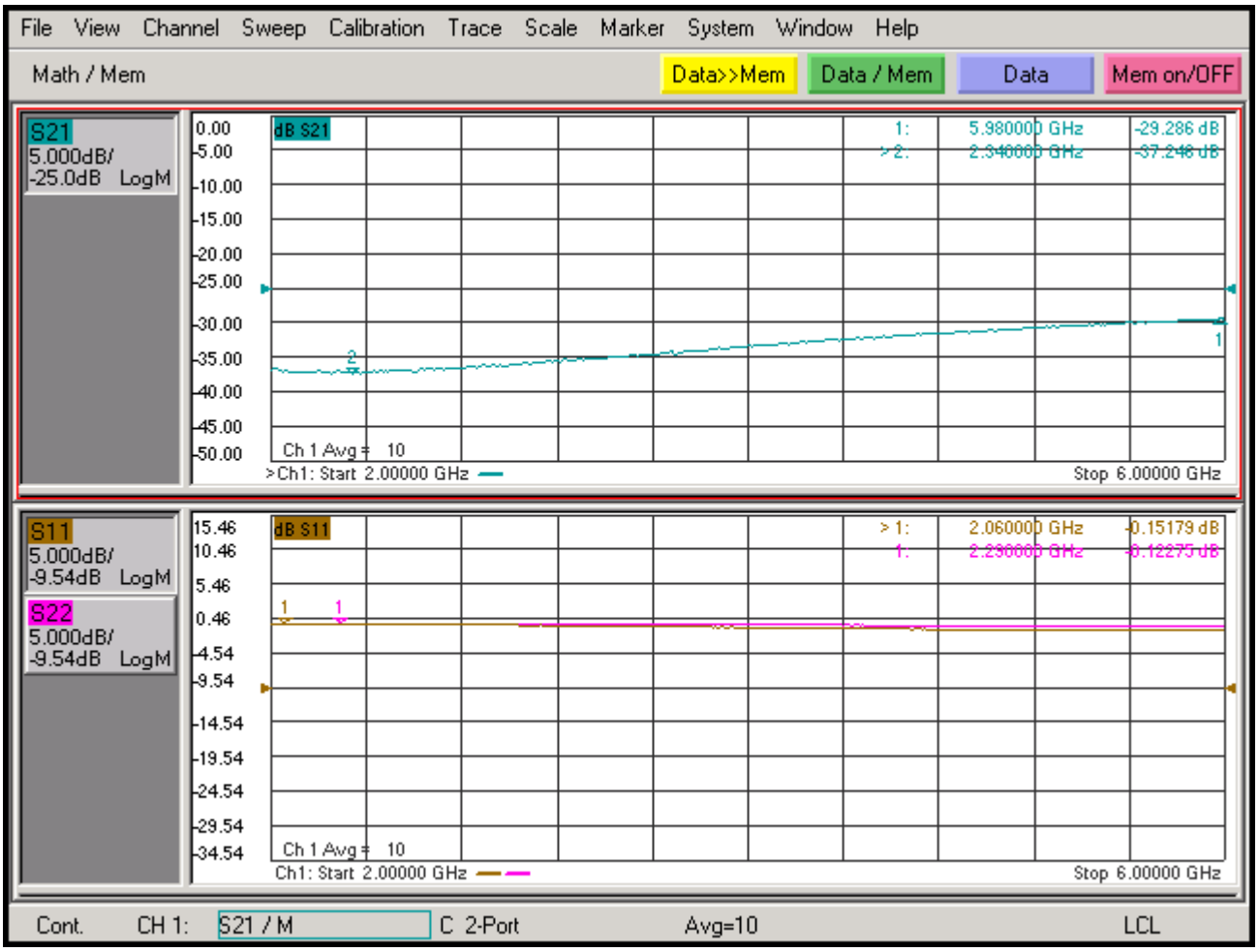

7311-F Grove Road Frederick, MD 21704 USA Phone: (301)662-5019 Fax: (301)662-1731
Email: sales@pmi-rf.com

Typical Characteristics on P1T-2G6G-25-6NS-ECL

Switching Speed Setup

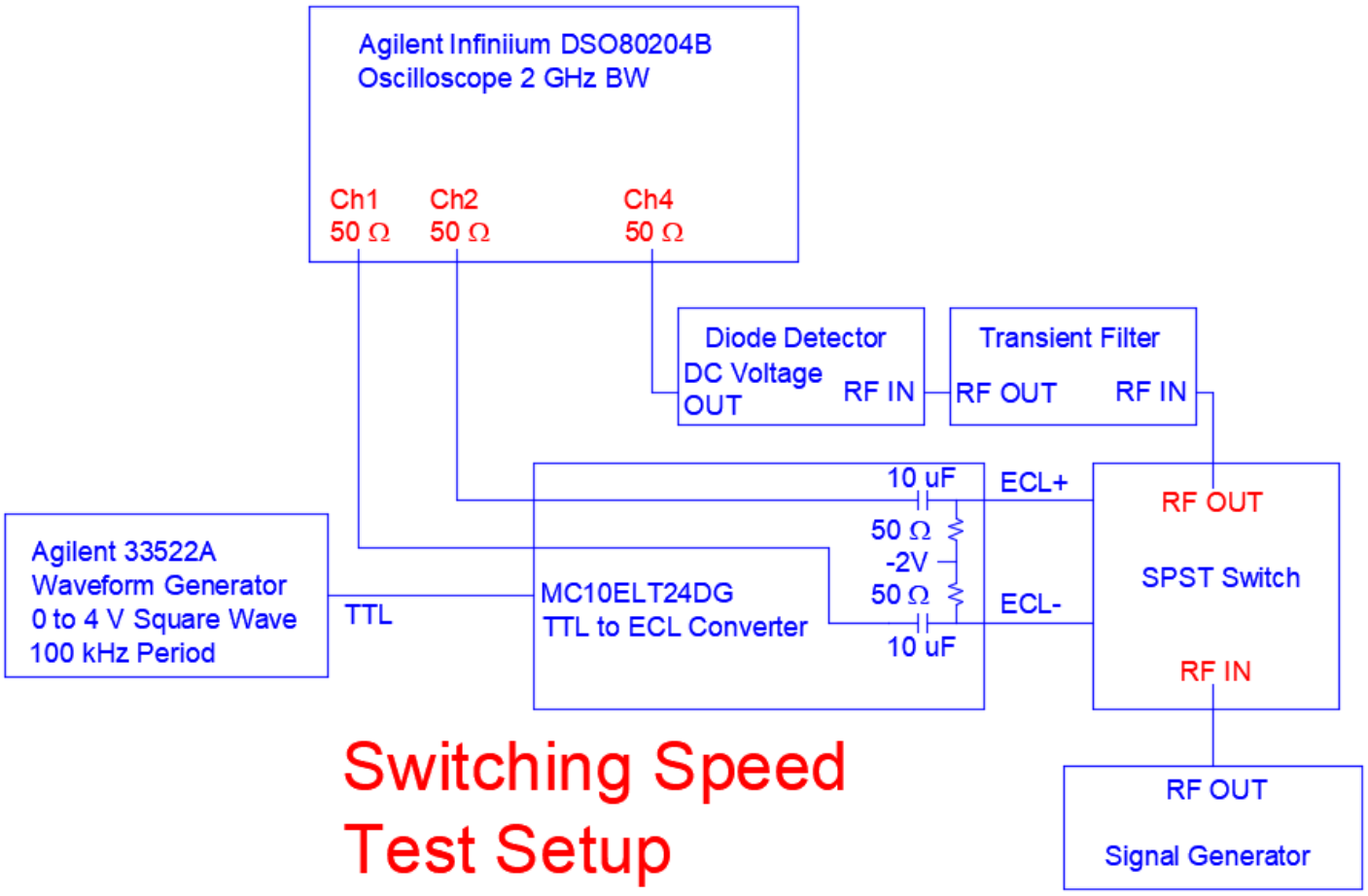

Switching Speed Test Setup

7311-F Grove Road Frederick, MD 21704 USA Phone: (301)662-5019 Fax: (301)662-1731
Email: sales@pmi-rf.com

Typical Characteristics
on
P1T-2G6G-25-6NS-ECL

RF Output Pulse with ECL Signals (2 GHz Scope)

RF Output (Pink Trace) – With Video Transient Filter
Clean Pulse, No Ringing

ECL Signals – Through 10 uF DC Blocking Capacitor into 50 ohm terminated scope

7311-F Grove Road Frederick, MD 21704 USA Phone: (301)662-5019 Fax: (301)662-1731
Email: sales@pmi-rf.com

Typical Characteristics
on
P1T-2G6G-25-6NS-ECL

RF On Time

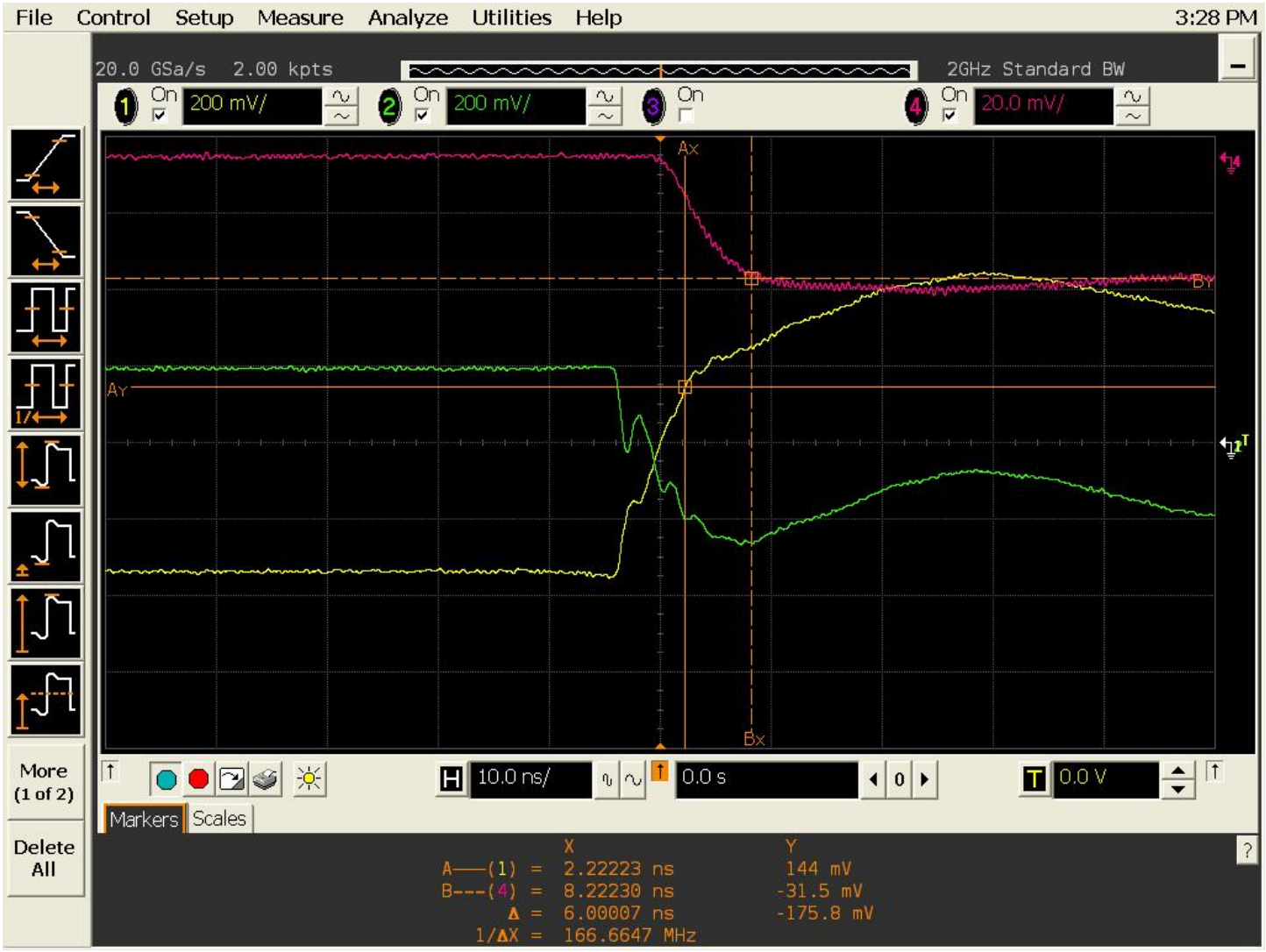

RF Output (Pink Trace) – With Video Transient Filter

ECL Controls (Green and Yellow Traces)

7311-F Grove Road Frederick, MD 21704 USA Phone: (301)662-5019 Fax: (301)662-1731
Email: sales@pmi-rf.com

Typical Characteristics
on
P1T-2G6G-25-6NS-ECL

RF Off Time

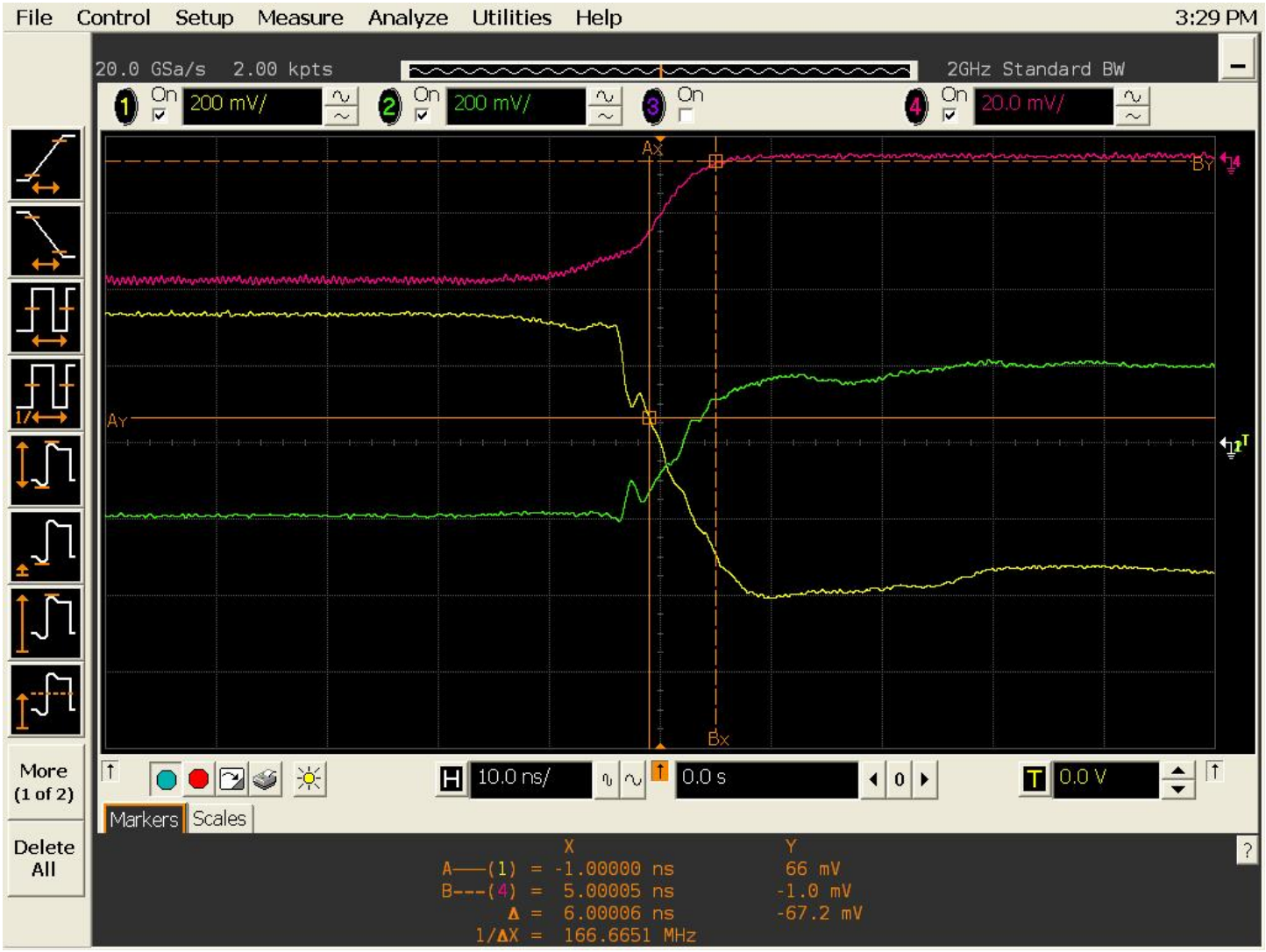

RF Output (Pink Trace) – With Video Transient Filter

ECL Controls (Green and Yellow Traces)

7311-F Grove Road Frederick, MD 21704 USA Phone: (301)662-5019 Fax: (301)662-1731
Email: sales@pmi-rf.com