AGM-003

GaAs pHEMT MMIC
4.0 – 8.0GHz Low Noise Amplifier

Typical Applications

- Test Instrumentation
- Military EW Systems
- Fiber Optics
- Telecom Infrastructure
- 5G basestations

Features

- Frequency Range: 4.0 – 8.0 GHz
- Noise Figure: 0.95dB
- Gain: 26.0dB
- P1dB: + 12.5dBm
- Self-Biased: +5V @ 25mA Single Supply
- 50Ω Matched Input/Output DC blocked
- Chip Size: 1.75 x 1.25 x 0.1 mm^2

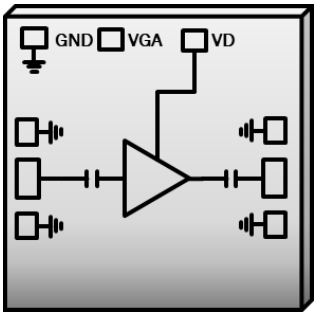

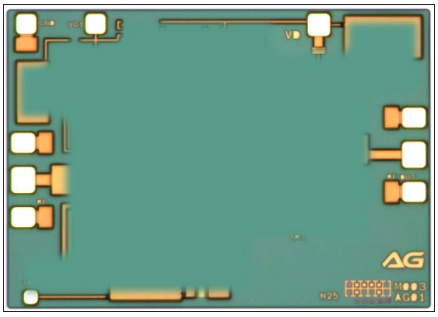

Electrical Specifications (TA = +25°C, VDD = +5V, IDD = 25mA)

Parameter	Units	Minimum	Typical	Maximum
Frequency	GHz	4.0		8.0
Gain	dB		26	
Gain Flatness	dB		± 0.2	
Noise Figure	dB		0.95	1.25
Input Return Loss	dB	12		
Output Return Loss	dB	13.5	16	
P1dB	dBm		12.5	
Psat	dBm		14.0	
Supply Voltage	V		+5	
Supply Current	mA		25	
DC Dissipated Power	mW		125	
Package Type			Die	

Low Noise Amplifiers - Die

Performance Graphs

Gain and Noise Figure

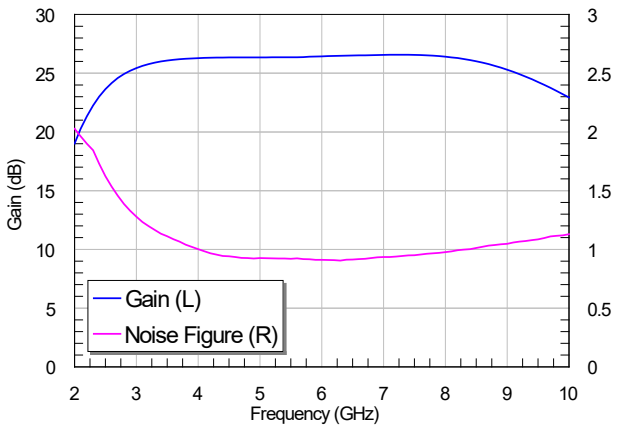

Return Losses

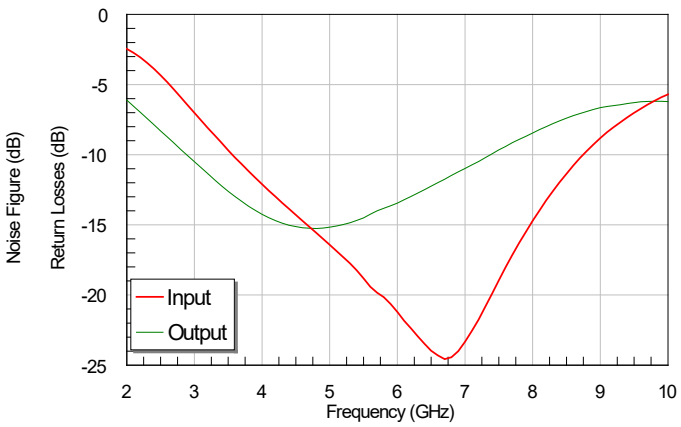

Output Power P1dB (Simulated)

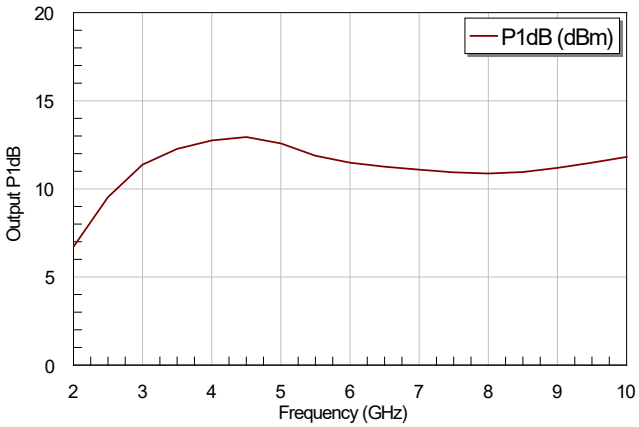

Power Sweep (Simulated)

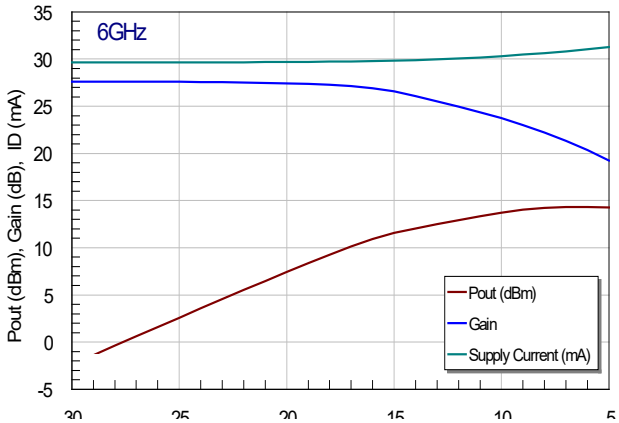

Outline Drawing (dimensions in mm)

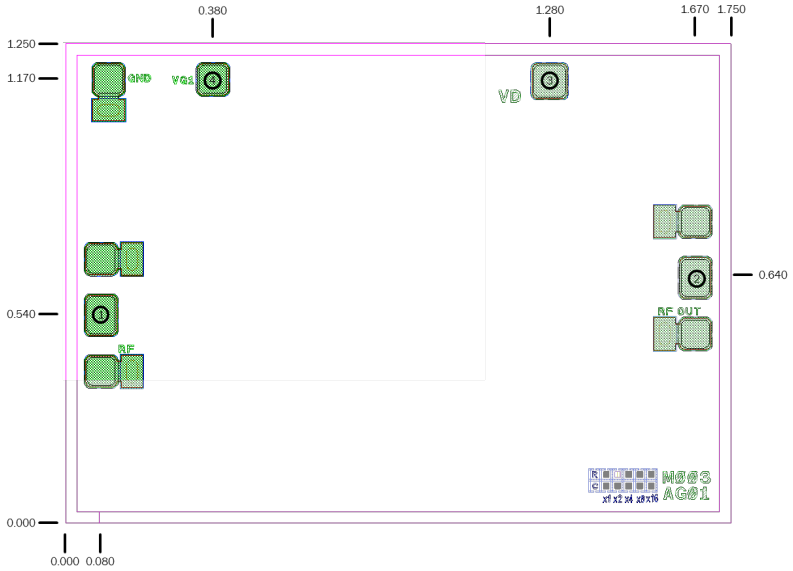

Pad Descriptions

Pad	Function	Pad Size	Description
1	RFIN	75x100µm	AC coupled 50Ω Matched
2	RFOUT	75x100µm	AC coupled 50Ω Matched
3	VDD	85x85µm	Drain Power Supply voltage, bypass capacitors needed
4	AGC	85x85µm	No connect needed – if AGC function needed vary 0-5V
Die Bottom	GND	Backside	Epoxy/Solder to Baseplate

Absolute Maximum Ratings

Drain Bias Voltage (VDD)	+7V DC
RF Input Power (RFIN)	+20dBm*
Channel Temperature	150°C
Storage Temperature	-65 to 150°C
Operating Temperature	-55 to 85°C

Assembly Diagram

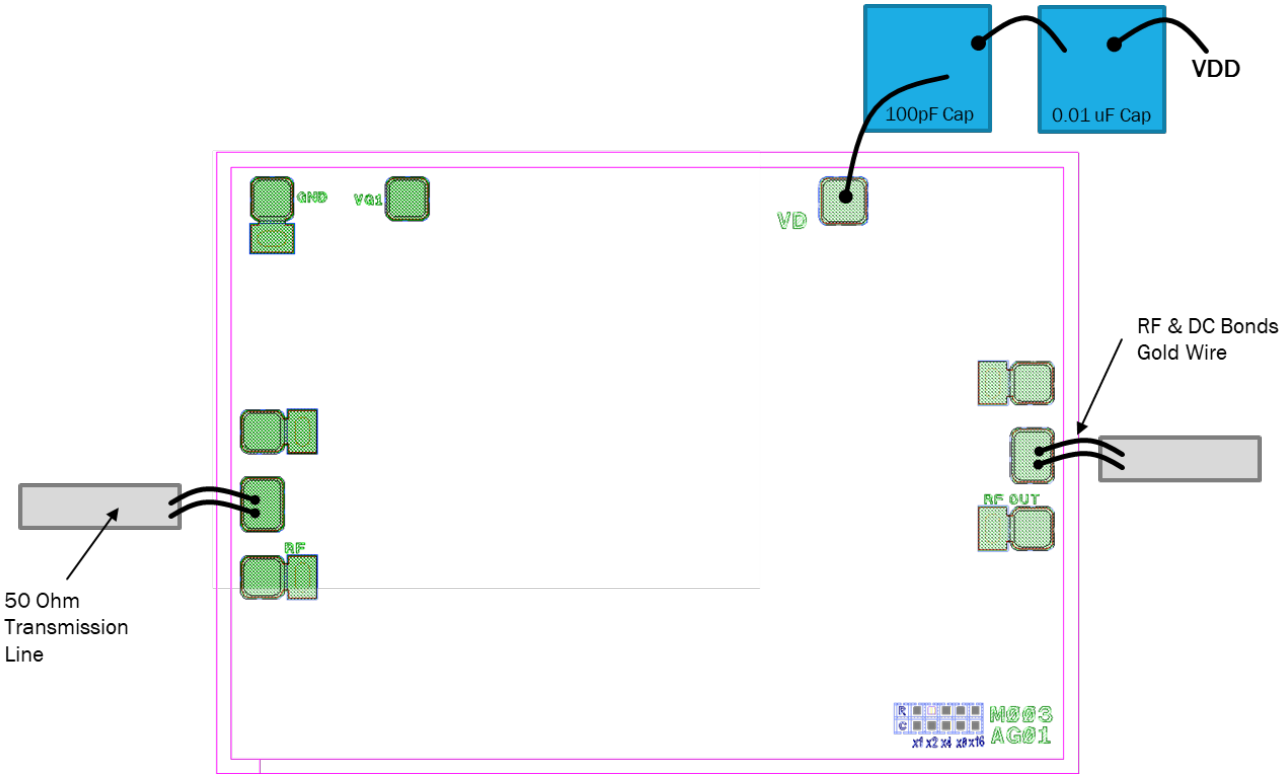

Assembly Notes:

1. Die Thickness is 100µm
2. Backside and Bondpad metallization: 4µm gold
3. Silver Epoxy or AuSn Eutectic attach MMIC

Die Packaging Information

- GP-8 (Gel-Pak)